NEC3 Term Service Contract (TSC3)

Between **ESKOM HOLDINGS SOC Ltd**
(Reg No. 2002/015527/30)

and **[Insert at award stage]**
(Reg No. _____)

for **Burner Repairs Scope Execution at Tutuka Power Station on an "as and when " Required basis for a period of 60 Months**

Contents:		**No of pages**
Part C1	**Agreements & Contract Data**	**[●]**
Part C2	**Pricing Data**	**[●]**
Part C3	**Scope of Work**	**[●]**

CONTRACT No. **[Insert at award stage]**

PART C1: AGREEMENTS & CONTRACT DATA

Contents:

C1.1 Form of Offer & Acceptance

Offer

The Employer, identified in the Acceptance signature block, has solicited offers to enter into a contract for the procurement of:

Burner Repairs Scope Execution at Tutuka Power Station on an "as and when "Required basis for a period of 60 Months

The tenderer, identified in the Offer signature block, has examined the documents listed in the Tender Data and addenda thereto and by submitting this Offer has accepted the Conditions of Tender.

By the representative of the tenderer, deemed to be duly authorised, signing this part of this Form of Offer and Acceptance the tenderer offers to perform all of the obligations and liabilities of the *Contractor* under the contract including compliance with all its terms and conditions according to their true intent and meaning for an amount to be determined in accordance with the *conditions of contract* identified in the Contract Data.

Options A or C	The offered total of the Prices exclusive of VAT is	**R [●]**
Option E	The first forecast of the total Defined Cost plus the Fee exclusive of VAT is	**R [●]**
	Sub total	**R [●]**
	Value Added Tax @ 14% is	**R [●]**
	The offered total of the amount due inclusive of VAT is[1]	**R [●]**
	(in words) **[●]**	

[1] This total is required by the *Employer* for budgeting purposes only. Actual amounts due will be assessed in terms of the *conditions of contract*.

This Offer may be accepted by the Employer by signing the Acceptance part of this Form of Offer and Acceptance and returning one copy of this document including the Schedule of Deviations (if any) to the tenderer before the end of the period of validity stated in the Tender Data, or other period as agreed, whereupon the tenderer becomes the party named as the *Contractor* in the *conditions of contract* identified in the Contract Data.

Signature(s)		
Name(s)		
Capacity	POWER STATION MANAGER	
For the tenderer:	ESKOM HOLDINGS SOC LTD TUTUKAPOWER STATION	
	(Insert name and address of organisation)	
Name & signature of witness		Date

Acceptance

By signing this part of this Form of Offer and Acceptance, the Employer identified below accepts the tenderer's Offer. In consideration thereof, the Employer shall pay the Contractor the amount due in accordance with the *conditions of contract* identified in the Contract Data. Acceptance of the tenderer's Offer shall form an agreement between the Employer and the tenderer upon the terms and conditions contained in this agreement and in the contract that is the subject of this agreement.

The terms of the contract, are contained in:

Part C1	Agreements and Contract Data, (which includes this Form of Offer and Acceptance)
Part C2	Pricing Data
Part C3	Scope of Work: Service Information

And drawings and documents (or parts thereof), which may be incorporated by reference into the above listed Parts.

Deviations from and amendments to the documents listed in the Tender Data and any addenda thereto listed in the Returnable Schedules as well as any changes to the terms of the Offer agreed by the tenderer and the Employer during this process of offer and acceptance, are contained in the Schedule of Deviations attached to and forming part of this Form of Offer and Acceptance. No amendments to or deviations from said documents are valid unless contained in this Schedule.

The tenderer shall within two weeks of receiving a completed copy of this agreement, including the Schedule of Deviations (if any), contact the Employer's agent (whose details are given in the Contract Data) to arrange the delivery of any securities, bonds, guarantees, proof of insurance and any other documentation to be provided in terms of the *conditions of contract* identified in the Contract Data at, or just after, the date this agreement comes into effect. Failure to fulfil any of these obligations in accordance with those terms shall constitute a repudiation of this agreement.

Notwithstanding anything contained herein, this agreement comes into effect on the date when the tenderer receives one fully completed and signed original copy of this document, including the Schedule of Deviations (if any).

Signature(s)		
Name(s)		
Capacity		POWER STATION MANAGER
for the Employer		ESKOM HOLDINGS SOC LTD TUTUKAPOWER STATION
	(Insert name and address of organisation)	
Name & signature of witness		Date

Note: If a tenderer wishes to submit alternative tenders, use another copy of this Form of Offer and Acceptance.Schedule of Deviations to be completed by the *Employer* prior to contract award

Note:

1. This part of the Offer & Acceptance would not be required if the contract has been developed by negotiation between the Parties and is not the result of a process of competitive tendering.
2. The extent of deviations from the tender documents issued by the Employer prior to the tender closing date is limited to those permitted in terms of the Conditions of Tender.
3. A tenderer's covering letter must not be included in the final contract document. Should any matter in such letter, which constitutes a deviation as aforesaid be the subject of agreement reached during the process of Offer and Acceptance, the outcome of such agreement shall be recorded here and the final draft of the contract documents shall be revised to incorporate the effect of it.

No.	Subject	Details
1	**[●]**	**[●]**
2	**[●]**	**[●]**
3	**[●]**	**[●]**
4	**[●]**	**[●]**
5	**[●]**	**[●]**
6	**[●]**	**[●]**
7	**[●]**	**[●]**

By the duly authorised representatives signing this Schedule of Deviations below, the Employer and the tenderer agree to and accept this Schedule of Deviations as the only deviations from and amendments to the documents listed in the Tender Data and any addenda thereto listed in the Tender Schedules, as well as any confirmation, clarification or changes to the terms of the Offer agreed by the tenderer and the Employer during this process of Offer and Acceptance.

It is expressly agreed that no other matter whether in writing, oral communication or implied during the period between the issue of the tender documents and the receipt by the tenderer of a completed signed copy of this Form shall have any meaning or effect in the contract between the parties arising from this Agreement.

	For the tenderer:	**For the Employer**
Signature		

Name	.....	.....
Capacity	.....	.....
On behalf of	..... *(Insert name and address of organisation)*	..... *(Insert name and address of organisation)*
Name & signature of witness	.....	.....
	.....	.....
Date	.....	.....

C1.2 TSC3 Contract Data

Part one - Data provided by the *Employer*

[Instructions to the contract compiler: (delete these two notes in the final draft of a contract)

1. Please read the relevant clauses in the conditions of contract before you enter data. The number of the clause which requires the data is shown in the left hand column for each statement however other clauses may also use the same data.

2. Some TSC3 options are always selected by Eskom Holdings SOC Ltd. The remaining TSC3 options are identified by shading in the left hand column. In the event that the option is not required select and delete the whole row. Where the following symbol is used "**[●]" -** data is required to be inserted relevant to the specific option selected.]

Completion of this data in full, according to the Options chosen, is essential to create a complete contract.

Clause	Statement	Data
1	**General**	
	The *conditions of contract* are the core clauses and the clauses for main Option:	
		A: Priced contract with price list
	dispute resolution Option	**W1: Dispute resolution procedure**
	and secondary Options	
		X1: Price adjustment for inflation
		X2 Changes in the lawX17: Low service damages
		X18: Limitation of liability
		X19: Task Order

		Z: *Additional conditions of contract*
	of the NEC3 Term Service Contract April 2013[2] (TSC3)	
10.1	The *Employer* is (name):	**Eskom Holdings SOC Ltd (reg no: 2002/015527/30), a state owned company incorporated in terms of the company laws of the Republic of South Africa**
	Address	**Registered office at Megawatt Park, Maxwell Drive, Sandton, Johannesburg**
	Tel No.	
	Fax No.	
10.1	The *Service Manager* is (name):	
	Address	
	Tel	
	Fax	
	e-mail	
11.2(2)	The Affected Property is	**Tutuka Power Station**
11.2(13)	The *service* is	**Part 3: Scope of Work and all documents and drawings to which it makes reference.**
11.2(14)	The following matters will be included in the Risk Register	**N/A**
11.2(15)	The Service Information is in	**Part 3: Scope of Work and all documents and drawings to which it makes reference.**
12.2	The *law of the contract* is the law of	**the Republic of South Africa**
13.1	The *language of this contract* is	**English**
13.3	The *period for reply* is	**3 Days**
2	**The *Contractor*'s main responsibilities**	**Data required by this section of the core clauses is also provided by the *Contractor* in Part 2 and terms in italics used in this section are identified elsewhere in this Contract Data**
21.1	The *Contractor* submits a first plan for acceptance within	**On Contract award agreed between *Service Manager* and *Contractor***
3	**Time**	
30.1	The *starting date* is.	**1 March 2022**
30.1	The *service period* is	**5 Years**
4	**Testing and defects**	**There is no reference to Contract Data in this section of the core clauses and terms in italics**

[2] Available from Engineering Contract Strategies Tel 011 803 3008 Fax 086 539 1902 www.ecs.co.za

		used in this section are identified elsewhere in this Contract Data
5	**Payment**	
50.1	The *assessment interval* is	**On the 20th day of each successive month.**
51.1	The *currency of this contract* is the	**South African Rand**
51.2	The period within which payments are made is	**4 weeks**
51.4	The *interest rate* is	**the publicly quoted prime rate of interest (calculated on a 365 day year) charged by from time to time by the Standard Bank of South Africa Limited (as certified, in the event of any dispute, by any manager of such bank, whose appointment it shall not be necessary to prove) for amounts due in Rands and** **(ii) the LIBOR rate applicable at the time for amounts due in other currencies. LIBOR is the 6 month London Interbank Offered Rate quoted under the caption "Money Rates" in The Wall Street Journal for the applicable currency or if no rate is quoted for the currency in question then the rate for United States Dollars, and if no such rate appears in The Wall Street Journal then the rate as quoted by the Reuters Monitor Money Rates Service (or such service as may replace the Reuters Monitor Money Rates Service) on the due date for the payment in question, adjusted *mutatis mutandis* every 6 months thereafter (and as certified, in the event of any dispute, by any manager employed in the foreign exchange department of The Standard Bank of South Africa Limited, whose appointment it shall not be necessary to prove.**
6	**Compensation events**	**There is no reference to Contract Data in this section of the core clauses and terms in italics used in this section are identified elsewhere in this Contract Data**
7	**Use of Equipment Plant and Materials**	**There is no reference to Contract Data in this section of the core clauses and terms in italics used in this section are identified elsewhere in this Contract Data**
8	**Risks and insurance**	
80.1	These are additional Employer's risks	1. [N/A]NOW PART OF" Z" CLUASE 12.1.and 12.2
		2. [●]
		3. [●]
9	**Termination**	**There is no reference to Contract Data in this section of the core clauses and terms in italics**

		used in this section are identified elsewhere in this Contract Data.
10	**Data for main Option clause**	
A	**Priced contract with price list**	
20.5	The *Contractor* prepares forecasts of the final total of the Prices for the whole of the *service* at intervals no longer than	**1 week.**
11	**Data for Option W1**	
W1.1	The *Adjudicator*	**the person selected from the ICE-SA Division (or its successor body) of the South African Institution of Civil Engineering Panel of Adjudicators by the Party intending to refer a dispute to him. (see www.ice-sa.org.za). If the Parties do not agree on an Adjudicator the Adjudicator will be appointed by the Arbitration Foundation of Southern Africa (AFSA).**
	Address	**N/A**
	Tel No.	**N/A**
	Fax No.	**N/A**
	e-mail	**N/A**
W1.2(3)	The *Adjudicator nominating body* is:	**the Chairman of ICE-SA a joint Division of the South African Institution of Civil Engineering and the Institution of Civil Engineers (London) (see www.ice-sa.org.za) or its successor body.**
W1.4(2)	The *tribunal* is:	**arbitration**
W1.4(5)	The *arbitration procedure* is	**the latest edition of Rules for the Conduct of Arbitrations published by The Association of Arbitrators (Southern Africa) or its successor body.**
	The place where arbitration is to be held is	**[•] South Africa**
	The person or organisation who will choose an arbitrator - if the Parties cannot agree a choice or - if the arbitration procedure does not state who selects an arbitrator, is	**the Chairman for the time being or his nominee of the Association of Arbitrators (Southern Africa) or its successor body.**
12	**Data for secondary Option clauses**	
X1	**Price adjustment for inflation**	
X1.1	The *base date* for indices is	**November 2021**

	The proportions used to calculate the Price Adjustment Factor are:	**proportion**	**linked to index for**	**Index prepared by**
		%	**Labour**	**SEIFSA Table C3**
		%	**Transport**	**SEIFSA Table L2**
		%	**Material**	**SEIFSA Table**
		0	**[●]**	**[●]**
		0	**[●]**	**[●]**
		15%	**non-adjustable**	
		100%		
X2	**Changes in the law**	**There is no reference to Contract Data in this Option and terms in italics are identified elsewhere in this Contract Data.**		
X17	**Low service damages**	**0.5% of the task order limited to a 10% of the contract value**		
X18	**Limitation of liability**			
X18.1	The *Contractor*'s liability to the *Employer* for indirect or consequential loss is limited to	**R0.0 (zero Rand)**		
X18.2	For any one event, the *Contractor*'s liability to the *Employer* for loss of or damage to the *Employer*'s property is limited to	**The amount of the deductibles relevant to the event.**		
X18.3	The *Contractor*'s liability for Defects due to his design of an item of Equipment is limited to	**The total of the Prices at the Contract Date**		
X18.4	The *Contractor*'s total liability to the *Employer*, for all matters arising under or in connection with this contract, other than the excluded matters, is limited to	**the total of the Prices other than for the additional excluded matters.** **The *Contractor's* total liability for the additional excluded matters is not limited.** **The additional excluded matters are amounts for which the *Contractor* is liable under this contract for** • **Defects due to his design, plan and specification,** • **Defects due to manufacture and fabrication outside the Affected Property,** • **loss of or damage to property (other than the *Employer*'s property, Plant and Materials),**		

		• **death of or injury to a person and** • **infringement of an intellectual property right.**
X18.5	The *end of liability date* is	**[1] months after the end of the *service period*.**
X19	**Task Order**	
X19.5	The *Contractor* submits a Task Order programme to the *Service Manager* within	**[1] day of receiving the Task Order**
Z	**The *additional conditions of contract* are**	**Z1 to Z14 always apply.**

Z1 Cession delegation and assignment

Z1.1 The *Contractor* does not cede, delegate or assign any of its rights or obligations to any person without the written consent of the *Employer.*

Z1.2 Notwithstanding the above, the *Employer* may on written notice to the *Contractor* cede and delegate its rights and obligations under this contract to any of its subsidiaries or any of its present divisions or operations which may be converted into separate legal entities as a result of the restructuring of the Electricity Supply Industry.

Z2 Joint ventures

Z2.1 If the *Contractor* constitutes a joint venture, consortium or other unincorporated grouping of two or more persons or organisations then these persons or organisations are deemed to be jointly and severally liable to the *Employer* for the performance of this contract.

Z2.2 Unless already notified to the *Employer*, the persons or organisations notify the *Service Manager* within two weeks of the Contract Date of the key person who has the authority to bind the *Contractor* on their behalf.

Z2.3 The *Contractor* does not alter the composition of the joint venture, consortium or other unincorporated grouping of two or more persons without the consent of the *Employer* having been given to the *Contractor* in writing.

Z3 Change of Broad Based Black Economic Empowerment (B-BBEE) status

Z3.1 Where a change in the *Contractor's* legal status, ownership or any other change to his business composition or business dealings results in a change to the *Contractor*'s B-BBEE status, the *Contractor* notifies the *Employer* within seven days of the change.

Z3.2 The *Contractor* is required to submit an updated verification certificate and necessary supporting documentation confirming the change in his B-BBEE status to the *Service Manager* within thirty days of the notification or as otherwise instructed by the *Service Manager*.

Z3.3 Where, as a result, the *Contractor's* B-BBEE status has decreased since the Contract Date the *Employer* may either re-negotiate this contract or alternatively, terminate the *Contractor*'s obligation to Provide the Service.

Z3.4 Failure by the *Contractor* to notify the *Employer* of a change in its B-BBEE status may constitute a reason for termination. If the *Employer* terminates in terms of this clause, the procedures on termination are P1, P2 and P4 as stated in clause 92, and the amount due is A1 and A3 as stated in clause 93.

Z4 Ethics

Z4.1 Any offer, payment, consideration, or benefit of any kind made by the *Contractor*, which constitutes or could be construed either directly or indirectly as an illegal or corrupt practice, as an inducement or reward for the award or in execution of this contract constitutes grounds for terminating the *Contractor*'s obligation to Provide the Service or taking any other action as appropriate against the *Contractor* (including civil or criminal action).

Z4.2 The *Employer* may terminate the *Contractor*'s obligation to Provide the Service if the *Contractor* (or any member of the *Contractor* where the *Contractor* constitutes a joint venture, consortium or other unincorporated grouping of two or more persons or organisations) is found guilty by a competent court, administrative or regulatory body of participating in illegal or corrupt practices.

Such practices include making of offers, payments, considerations, or benefits of any kind or otherwise, whether in connection with any procurement process or contract with the *Employer* or other people or organisations and including in circumstances where the *Contractor* or any such member is removed from the an approved vendor data base of the *Employer* as a consequence of such practice.

Z4.3 Notwithstanding the provisions of core clause 90.2, the procedures on termination in terms of this clause are P1, P2 and P4 as stated in the core clause 92 and the amount due is A1 and A3 as stated in core clause 93.

Z5 Confidentiality

Z5.1 The *Contractor* does not disclose or make any information arising from or in connection with this contract available to Others. This undertaking does not, however, apply to information which at the time of disclosure or thereafter, without default on the part of the *Contractor*, enters the public domain or to information which was already in the possession of the *Contractor* at the time of disclosure (evidenced by written records in existence at that time). Should the *Contractor* disclose information to Others in terms of clause 25.1, the *Contractor* ensures that the provisions of this clause are complied with by the recipient.

Z5.2 If the *Contractor* is uncertain about whether any such information is confidential, it is to be regarded as such until notified otherwise by the *Service Manager*.

Z5.3 In the event that the *Contractor* is, at any time, required by law to disclose any such information which is required to be kept confidential, the *Contractor*, to the extent permitted by law prior to disclosure, notifies the *Employer* so that an appropriate protection order and/or any other action can be taken if possible, prior to any disclosure. In the event that such protective order is not, or cannot, be obtained, then the *Contractor* may disclose that portion of the information which it is required to be disclosed by law and uses reasonable efforts to obtain assurances that confidential treatment will be afforded to the information so disclosed.

Z5.4 The taking of images (whether photographs, video footage or otherwise) of the Affected Property or any portion thereof, in the course of Providing the Service and after the end of the *service period*, requires the prior written consent of the *Service Manager*. All rights in and to all such images vests exclusively in the *Employer*.

Z5.5 The *Contractor* ensures that all his subcontractors abide by the undertakings in this clause.

Z6 Waiver and estoppel: Add to core clause 12.3:

Z6.1 Any extension, concession, waiver or relaxation of any action stated in this contract by the Parties, the *Service Manager* or the *Adjudicator* does not constitute a waiver of rights, and does not give rise to an estoppel unless the Parties agree otherwise and confirm such agreement in writing.

Z7 Health, safety and the environment: Add to core clause 27.4

Z7.1 The *Contractor* undertakes to take all reasonable precautions to maintain the health and safety of persons in and about the execution of the *service*. Without limitation the *Contractor*:

- accepts that the *Employer* may appoint him as the "Principal Contractor" (as defined and provided for under the Construction Regulations 2014 (promulgated under the Occupational Health & Safety Act 85 of 1993) ("the Construction Regulations") for the Affected Property;
- warrants that the total of the Prices as at the Contract Date includes a sufficient amount for proper compliance with the Construction Regulations, all applicable health & safety laws and regulations and the health and safety rules, guidelines and procedures provided for in this contract and generally for the proper maintenance of health & safety in and about the execution of the *service*; and
- undertakes, in and about the execution of the *service*, to comply with the Construction Regulations and with all applicable health & safety laws and regulations and rules, guidelines and procedures otherwise provided for under this contract and ensures that his Subcontractors, employees and others under the *Contractor's* direction and control, likewise observe and comply with the foregoing.

Z7.2 The *Contractor*, in and about the execution of the *service*, complies with all applicable environmental laws and regulations and rules, guidelines and procedures otherwise provided for under this contract and ensures that his Subcontractors, employees and others under the *Contractor's* direction and control, likewise observe and comply with the foregoing.

Z8 Provision of a Tax Invoice and interest. Add to core clause 51

Z8.1 Within one week of receiving a payment certificate from the *Service Manager* in terms of core clause 51.1, the *Contractor* provides the *Employer* with a tax invoice in accordance with the *Employer*'s procedures stated in the Service Information, showing the amount due for payment equal to that stated in the payment certificate.

Z8.2 If the *Contractor* does not provide a tax invoice in the form and by the time required by this contract, the time by when the *Employer* is to make a payment is extended by a period equal in time to the delayed submission of the correct tax invoice. Interest due by the *Employer* in terms of core clause 51.2 is then calculated from the delayed date by when payment is to be made.

Z8.3 The *Contractor* (if registered in South Africa in terms of the companies Act) is required to comply with the requirements of the Value Added Tax Act, no 89 of 1991 (as amended) and to include the *Employer*'s VAT number 4740101508 on each invoice he submits for payment.

Z9 Notifying compensation events

Z9.1 Delete the last paragraph of core clause 61.3 and replace with:

If the *Contractor* does not notify a compensation event within eight weeks of becoming aware of the event, he is not entitled to a change in the Prices.

Z10 *Employer's* limitation of liability

Z10.1 The *Employer's* liability to the *Contractor* for the *Contractor's* indirect or consequential loss is limited to R0.00 (zero Rand)

Z11

For the purposes of this Z-clause, the following definitions apply:

Affected Party means, as the context requires, any party, irrespective of whether it is the *Contractor* or a third party, such party's employees, agents, or Subcontractors or Subcontractor's employees, or any one or more of all of these parties' relatives or friends,

Coercive Action means to harm or threaten to harm, directly or indirectly, an Affected Party or the property of an Affected Party, or to otherwise influence or attempt to influence an Affected Party to act unlawfully or illegally,

Collusive Action means where two or more parties co-operate to achieve an unlawful or illegal purpose, including to influence an Affected Party to act unlawfully or illegally,

Committing Party means, as the context requires, the *Contractor*, or any member thereof in the case of a joint venture, or its employees, agents, or Subcontractors or the Subcontractor's employees,

Corrupt Action means the offering, giving, taking, or soliciting, directly or indirectly, of a good or service to unlawfully or illegally influence the actions of an Affected Party,

Fraudulent Action means any unlawfully or illegally intentional act or omission that misleads, or attempts to mislead, an Affected Party, in order to obtain a financial or other benefit or to avoid an obligation or incurring an obligation,

Obstructive Action means a Committing Party unlawfully or illegally destroying, falsifying, altering or concealing information or making false statements to materially impede an investigation into allegations of Prohibited Action and

Prohibited Action means any one or more of a Coercive Action, Collusive Action Corrupt Action, Fraudulent Action or Obstructive Action.

Z 11.1 A Committing Party may not take any Prohibited Action during the course of the procurement of this contract or in execution thereof.

Z 11.2 The *Employer* may terminate the *Contractor*'s obligation to Provide the Service if a Committing Party has taken such Prohibited Action and the *Contractor* did not take timely and appropriate action to prevent or remedy the situation, without limiting any other rights or remedies the *Employer* has. It is not required that the Committing Party had to have been found guilty, in court or in any other similar process, of such Prohibited Action before the *Employer* can terminate the *Contractor*'s obligation to Provide the Service for this reason.

Z 11.3 If the *Employer* terminates the *Contractor*'s obligation to Provide the Service for this reason, the procedures and amounts due on termination are respectively P1, P2, P3 and P4, and A1 and A3.

Z 11.4 A Committing Party co-operates fully with any investigation pursuant to alleged Prohibited Action. Where the *Employer* does not have a contractual bond with the Committing Party, the *Contractor* ensures that the Committing Party co-operates fully with an investigation.

Z12 Insurance

Z _12_.1 Replace core clause 83 with the following:

Insurance cover

83

83.1 When requested by a Party, the other Party provides certificates from his insurer or broker stating that the insurances required by this contract are in force.

83.2 The *Contractor* provides the insurances stated in the Insurance Table A from the *starting date* until the earlier of Completion and the date of the termination certificate.

INSURANCE TABLE A

Insurance against	Minimum amount of cover or minimum limit of indemnity
Loss of or damage caused by the *Contractor* to the *Employer*'s property	The replacement cost where not covered by the *Employer*'s insurance. The *Employer*'s policy deductible as at Contract Date, where covered by the *Employer*'s insurance.
Loss of or damage to Plant and Materials	The replacement cost where not covered by the *Employer*'s insurance. The *Employer*'s policy deductible as at Contract Date, where covered by the *Employer*'s insurance.
Loss of or damage to Equipment	The replacement cost where not covered by the *Employer*'s insurance. The *Employer*'s policy deductible as at Contract Date, where covered by the *Employer*'s insurance.
The *Contractor*'s liability for loss of or damage to property (except the *Employer*'s property, Plant and Materials and Equipment) and liability for bodily injury to or death of a person (not an employee of the *Contractor*) arising from or in connection with the *Contractor*'s Providing the Service	**Loss of or damage to property** The replacement cost **Bodily injury to or death of a person** The amount required by the applicable law.
Liability for death of or bodily injury to employees of the *Contractor* arising out of and in the course of their employment in connection with this contract	The amount required by the applicable law

Z 12.2 Replace core clause 86 with the following:

Insurance by the *Employer*

86

86.1 The *Employer* provides the insurances stated in the Insurance Table B

INSURANCE TABLE B

Insurance against or name of policy	Minimum amount of cover or minimum lir of indemnity
Assets All Risk	Per the insurance policy document
Contract Works insurance	Per the insurance policy document
Environmental Liability	Per the insurance policy document
General and Public Liability	Per the insurance policy document
Transportation (Marine)	Per the insurance policy document

Motor Fleet and Mobile Plant	Per the insurance policy document
Terrorism	Per the insurance policy document
Cyber Liability	Per the insurance policy document
Nuclear Material Damage and Business Interruption	Per the insurance policy document
Nuclear Material Damage Terrorism	Per the insurance policy document

Z13 Nuclear Liability

Z13.1 The *Employer* is the operator of the Koeberg Nuclear Power Station (KNPS), a nuclear installation, as designated by the National Nuclear Regulator of the Republic of South Africa, and is the holder of a nuclear licence in respect of the KNPS.

Z13.2 The *Employer* is solely responsible for and indemnifies the *Contractor* or any other person against any and all liabilities which the *Contractor* or any person may incur arising out of or resulting from nuclear damage, as defined in Act 44 of 1999, save to the extent that any liabilities are incurred due to the unlawful intent of the *Contractor* or any other person or the presence of the *Contractor* or that person or any property of the *Contractor* or such person at or in the KNPS or on the KNPS site, without the permission of the *Employer* or of a person acting on behalf of the *Employer*.

Z13.3 Subject to clause Z13.4 below, the *Employer* waives all rights of recourse, arising from the aforesaid, save to the extent that any claims arise or liability is incurred due or attributable to the unlawful intent of the *Contractor* or any other person, or the presence of the *Contractor* or that person or any property of the *Contractor* or such person at or in the KNPS or on the KNPS site, without the permission of the *Employer* or of a person acting on behalf of the *Employer*.

Z13.4 The *Employer* does not waive its rights provided for in section 30 (7) of Act 44 of 1999, or any replacement section dealing with the same subject matter.

Z13.5 The protection afforded by the provisions hereof shall be in effect until the KNPS is decommissioned.

Z14 Asbestos

For the purposes of this Z-clause, the following definitions apply:

AAIA means approved asbestos inspection authority.

ACM means asbestos containing materials.

AL means action level, i.e. a level of 50% of the OEL, i.e. 0.1 regulated asbestos fibres per ml of air measured over a 4 hour period. The value at which proactive actions is required in order to control asbestos exposure to prevent exceeding the OEL.

Ambient Air means breathable air in area of work with specific reference to breathing zone, which is defined to be a virtual area within a radius of approximately 30cm from the nose inlet.

Compliance Monitoring means compliance sampling used to assess whether or not the personal exposure of workers to regulated asbestos fibres is in compliance with the Standard's requirements for safe processing, handling, storing, disposal and phase-out of asbestos and asbestos containing material, equipment and articles.

OEL means occupational exposure limit.

Parallel Measurements means measurements performed in parallel, yet separately, to existing measurements to verify validity of results.

Safe Levels means airborne asbestos exposure levels conforming to the Standard's requirements for safe processing, handling, storing, disposal and phase-out of asbestos and asbestos containing material, equipment and articles.

Standard means the *Employer*'s Asbestos Standard 32-303: Requirements for Safe Processing, Handling, Storing, Disposal and Phase-out of Asbestos and Asbestos Containing Material, Equipment and Articles.

SANAS means the South African National Accreditation System.

TWA means the average exposure, within a given workplace, to airborne asbestos fibres, normalised to the baseline of a 4 hour continuous period, also applicable to short term exposures, i.e. 10-minute TWA.

Z14.1 The *Employer* ensures that the Ambient Air in the area where the *Contractor* will Provide the Services conforms to the acceptable prescribed South African standard for asbestos, as per the regulations published in GNR 155 of 10 February 2002, under the Occupational Health and Safety Act, 1993 (Act 85 of 1993) ("Asbestos Regulations"). The OEL for asbestos is 0.2 regulated asbestos fibres per millilitre of air as a 4-hour TWA, averaged over any continuous period of four hours, and the short term exposure limit of 0.6 regulated asbestos fibres per millilitre of air as a 10-minute TWA, averaged over any 10 minutes, measured in accordance with HSG248 and monitored according to HSG173 and OESSM.

Z14.2 Upon written request by the *Contractor*, the *Employer* certifies that these conditions prevail. All measurements and reporting are effected by an independent, competent, and certified occupational hygiene inspection body, i.e. a SANAS accredited and Department of Employment and Labour approved AAIA. The *Contractor* may perform Parallel Measurements and related control measures at the *Contractor*'s expense. For the purposes of compliance the results generated from Parallel Measurements are evaluated only against South African statutory limits as detailed in clause Z14.1. Control measures conform to the requirements stipulated in the AAIA-approved asbestos work plan.

Z14.3 The *Employer* manages asbestos and ACM according to the Standard.

Z14.4 In the event that any asbestos is identified while Providing the Services, a risk assessment is conducted and if so required, with reference to possible exposure to an airborne concentration of above the AL for asbestos, immediate control measures are implemented and relevant air monitoring conducted in order to declare the area safe.

Z14.5 The *Contractor*'s personnel are entitled to stop working and leave the contaminated area forthwith until such time that the area of concern is declared safe by either Compliance Monitoring or an AAIA approved control measure intervention, for example, per the emergency asbestos work plan, if applicable.

Z14.6 The *Contractor* continues to Provide the Services, without additional control measures presented, on presentation of Safe Levels. The contractually agreed dates to Provide the Services, including the Completion Date, are adjusted accordingly. The contractually agreed dates are extended by the notification periods required by regulations 3 and 21 of the Asbestos Regulations, 2001.

Z14.7 Any removal and disposal of asbestos, asbestos containing materials and waste, is done by a registered asbestos contractor, instructed by the *Employer* at the *Employer*'s expense, and conducted in line with South African legislation.

C1.2 Contract Data

Part two - Data provided by the *Contractor*

Completion of the data in full, according to Options chosen, is essential to create a complete contract.

Clause	Statement	Data
10.1	The *Contractor* is (Name): Address Tel No. Fax No.	
11.2(8)	The *direct fee percentage* is The *subcontracted fee percentage* is	**%** **%**
11.2(14)	The following matters will be included in the Risk Register	
11.2(15)	The Service Information for the *Contractor*'s plan is in:	
21.1	The plan identified in the Contract Data is contained in:	
24.1	The key people are: 1 Name: Job: Responsibilities: Qualifications: Experience: 2 Name: Job Responsibilities: Qualifications: Experience:	
		CV's (and further key person's data including CVs) are in .
A	**Priced contract with price list**	
11.2(12)	The *price list* is in	
11.2(19)	The tendered total of the Prices is	**R**

C1.3 Forms of Securities

Pro formas for Bonds & Guarantees

For use with the NEC3 Term Service Contract (TSC3)

[Note to contract compiler:
Once it has been decided which securities are required for this contract delete from this file the ones not required, revise the notes below accordingly and delete this note.]

The *conditions of contract* stated in the Contract Data Part 1 include the following Secondary Options:

Option X4: Parent company guarantee
Option X13: Performance Bond

Each of these secondary Options requires a bond or guarantee "in the form set out in the Service Information". Pro forma documents for these bonds and guarantees are provided here for convenience but are to be treated as part of the Service Information.

The *Contractor* shall guarantee his ASGI-SA Obligations by providing the *Employer* with an ASGI-SA Guarantee in the form provided here.

[Note to contract compiler: If there are no ASGI-SA Obligations in this contract, delete the above statement and the ASGI_SA bond]

The organisation providing the bond / guarantee does so by copying the pro forma document onto his letterhead without any change to the text or format and completing the required details. The completed document is then given to the *Employer* within the time stated in the contract.

Pro forma Parent Company Guarantee (for use with Option X4)

(to be reproduced exactly as shown below on the letterhead of the Contractor's Parent Company)

Eskom Holdings SOC Ltd
Megawatt Park
Maxwell Drive
Sandton
Johannesburg

Date:

Dear Sirs,

Parent Company Guarantee for Contract No

With reference to the above numbered contract made or to be made between

Eskom Holdings SOC Ltd (the *Employer*) and

{Insert registered name and address of the *Contractor*}

(the *Contractor*), for

{Insert details of the *works* from the Contract Data} (the *works*).

I/We the undersigned .....

on behalf of the *Contractor*'s parent company .....

of physical address .....

and duly authorised thereto do hereby unconditionally guarantee to the *Employer* that the *Contractor* shall Provide the Service in accordance with the above numbered Contract.

1. If for any reason the *Contractor* fails to Provide the Service, we hereby agree to cause to Provide the Service at no additional cost to the *Employer*.

2. If we fail to comply with the terms of this Deed of Guarantee, the *Employer* may itself procure such performance (whether or not the Agreement be formally determined). The *Employer* is to notify us and we shall indemnify the *Employer* for any additional cost or expense it incurs.

3. Our liability shall be as primary obligor and not merely as surety and shall not be impaired or discharged by reason of any arrangement or change in relationship made between the *Contractor* and the *Employer* and/or between us and *Contractor*; nor any alteration in the obligations undertaken by the *Contractor* or in the terms of the Agreement; nor any indulgence, failure, delay by you as to any matter; nor any dissolution or liquidation or such other analogous event of the *Contractor*.

4. The *Employer* shall not be obliged before taking steps to enforce the terms of this Deed of Guarantee to obtain judgement against the *Contractor* in any court or other tribunal, to make or file any claim in liquidation (or analogous proceedings) or to seek any remedy or proceed first against the *Contractor*.

5. This Deed of Guarantee shall be governed by and construed in accordance with the laws of the Republic of South Africa and we hereby submit to the non-exclusive jurisdiction of the High Court of South Africa.

Signed at ..... on this ..... day of ..... 200_

Signature(s)		
Name(s) (printed)		
Position in parent company		
Signature of Witness(s)		
Name(s) (printed)		

Pro forma Performance Bond – Demand Guarantee (for use with Option X13)

(to be reproduced exactly as shown below on the letterhead of the Bank providing the Guarantee)

Eskom Holdings SOC Ltd
Megawatt Park
Maxwell Drive
Sandton
Johannesburg

Reference No. **[●]** *[Drafting Note: Bank reference number to be inserted]*

Date:

Dear Sirs

Performance **Bond – Demand Guarantee**: *[Drafting Note: Name of Contractor to be inserted]*

Project [ ] Contract Reference: …… *[Drafting Note: Contractor contract reference number to be inserted]*

1. In this Guarantee the following words and expressions shall have the following meanings:-

1.1 "Bank" - means [●], [●] Branch, (Registration No. [●]); [Drafting Note: Name of Bank to be inserted]

1.2 "Bank's Address" - means [●]; [Drafting Note: Bank's physical address to be inserted]

1.3 "Contract" – means the written agreement relating to the Services, entered into between Eskom and the Contractor, on or about the [●] day of [●] 200[●] (Contract Reference No. [.] as amended, varied, restated, novated or substituted from time to time; [Drafting Note: Signature Date and Contract reference number to be inserted]

1.4 "Contractor" – means [●] a company registered in accordance with the laws of [●] under Registration Number [●]. [Drafting Note: Name and details of Contractor to be inserted]

1.5 "Eskom" - means Eskom Holdings SOC Ltd, a company registered in accordance with the laws of the Republic of South Africa under Registration Number 2002/015527/30].

1.6 "Expiry Date" - means the earlier of

- the date that the Bank receives a notice from Eskom stating that all amounts due from the Contractor as certified in terms of the contract have been received by Eskom and that the Contractor has fulfilled all his obligations under the Contract, or

- the date that the Bank issues a replacement Bond for such lesser or higher amount as may be required by Eskom

1.7 "Guaranteed Sum" - means the sum of R [●] ([●] Rand);

1.8 "Services" - means [insert as applicable.].

2. At the instance of the Contractor, we the undersigned _____ and _____, in our respective capacities as _____ and _____ of the Bank, and duly authorized thereto, confirm that we hold the Guaranteed Sum at the disposal of Eskom, as security for the proper performance by the Contractor of all of its obligations in terms of and arising from the Contract and hereby undertake to pay to Eskom, on written demand from Eskom received prior to the Expiry Date, any sum or sums not exceeding in total the Guaranteed Sum.

3. A demand for payment under this guarantee shall be made in writing at the Bank's address and shall:

3.1 be signed on behalf of Eskom by a Group Executive, Divisional Executive, Senior General Manager or its delegate;

3.2 state the amount claimed ("the Demand Amount');

3.3 state that the Demand Amount is payable to Eskom in the circumstances contemplated in the Contract.

4. Notwithstanding the reference herein to the Contract the liability of the Bank in terms hereof is as principal and not as surety and the Bank's obligation/s to make payment:

4.1 is and shall be absolute provided demand is made in terms of this bond in all circumstances; and

4.2 is not, and shall not be construed to be, accessory or collateral on any basis whatsoever.

5. The Bank's obligations in terms of this Guarantee:

5.1 shall be restricted to the payment of money only and shall be limited to the maximum of the Guaranteed Sum; and

5.2 shall not be discharged and compliance with any demand for payment received by the Bank in terms hereof shall not be delayed, by the fact that a dispute may exist between Eskom and the Contractor.

6. Eskom shall be entitled to arrange its affairs with the Contractor in any manner which it sees fit, without advising us and without affecting our liability under this Guarantee. This includes, without limitation, any extensions, indulgences, release or compromise granted to the Contractor or any variation under or to the Contract.

7. Should Eskom cede its rights against the Contractor to a third party where such cession is permitted under the Contract, then Eskom shall be entitled to cede to such third party the rights of Eskom under this Guarantee on written notification to the Bank of such cession.

8. This Guarantee:

8.1 shall expire on the Expiry Date until which time it is irrevocable;

8.2 is, save as provided for in 7 above, personal to Eskom and is neither negotiable nor transferable;

8.3 shall be returned to the Bank upon the earlier of payment of the full Guaranteed Sum or expiry hereof;

8.4 shall be regarded as a liquid document for the purpose of obtaining a court order; and

8.5 shall be governed by and construed in accordance with the law of the Republic of South Africa and shall be subject to the jurisdiction of the Courts of the Republic of South Africa.

8.6 Any claim which arises or demand for payment received after expiry date will be invalid and unenforceable.

9. The Bank chooses domicilium citandi et executandi for all purposes in connection with this Guarantee at the Bank's Address.

Signed at _____ Date _____

For and behalf of the Bank

Bank Signatory: _____ Bank Signatory: _____

Witness: _____ Witness: _____
Bank's seal or stamp

Pro forma ASGI-SA Guarantee

(to be reproduced exactly as shown below on the letterhead of the Bank providing the Guarantee)

Eskom Holdings SOC Ltd
Megawatt Park
Maxwell Drive
Sandton
Johannesburg

Reference No **[●]** *[Drafting Note: Bank reference number to be inserted]*

Date:

Dear Sirs

Pro-Forma ASGI-SA Guarantee: *[Drafting Note: Name of Contractor to be inserted]*

Project [ ] Contract Reference: **[●]** *[Drafting Note: Contractor contract reference number to be inserted]*

1. In this Guarantee the following words and expressions shall have the following meanings:-

1.1 "Bank" - means [●], [●] Branch, (Registration No. [●]); [Drafting Note: Name of Bank to be inserted]

1.2 "Bank's Address" - means [●]; [Drafting Note: Bank's physical address to be inserted]

1.3 "Contract" – means the written agreement relating to the Project, entered into between the *Employer* and the *Contractor*, on or about the [●] day of [●] 200[●] (Contract Reference No. **[●]** as amended, varied, restated, novated or substituted from time to time; [Drafting Note: Signature Date and Contract reference number to be inserted]

1.4 "*Contractor*" – means [●] a company registered in accordance with the laws of [●] under Registration Number [●]. [Drafting Note: Name and details of Contractor to be inserted]

1.5 "*Contractor's* ASGI-SA Obligations" – means the *Contractor's* ASGI-SA Obligations under and as defined in the Contract.

1.6 "*Employer*" - means Eskom Holdings SOC Ltd, a company registered in accordance with the laws of the Republic of South Africa under Registration Number 2002/015527/30.

1.7 "Expiry Date" - means the [●] day of [●] 200[●]; [Drafting Note: anticipated date of issue of ASGI-SA Performance Certificate to be inserted.]

1.8 "Guaranteed Sum" - means the sum of R [●] ([●] Rand);

1.9 "Project" – means the ……

2. At the instance of the *Contractor*, we the undersigned _____ and _____, in our respective capacities as _____ and _____ of the Bank, and duly authorized thereto, confirm that we hold the Guaranteed Sum at the disposal of the *Employer*, as security for the proper performance by the *Contractor* of the *Contractor's* ASGI-SA Obligations and hereby undertake to pay to the *Employer*, on written demand from the *Employer* received prior to the Expiry Date, any sum or sums not exceeding in total the Guaranteed Sum.

3. A demand for payment under this guarantee shall be made in writing at the Bank's address and shall:

3.1 state the amount claimed ("the Demand Amount');

3.2 state that the Demand Amount is payable to the *Employer* in the circumstances contemplated in the Contract.

4. Notwithstanding the reference herein to the Contract the liability of the Bank in terms hereof is as principal and not as surety and the Bank's obligation/s to make payment:

4.1 is and shall be absolute provided demand is made in terms of this bond in all circumstances; and

4.2 is not, and shall not be construed to be, accessory or collateral on any basis whatsoever.

5. The Bank's obligations in terms of this Guarantee:

5.1 shall be restricted to the payment of money only and shall be limited to the maximum of the Guaranteed Sum; and

5.2 shall not be discharged and compliance with any demand for payment received by the Bank in terms hereof shall not be delayed, by the fact that a dispute may exist between the *Employer* and the *Contractor*.

6. The *Employer* shall be entitled to arrange its affairs with the *Contractor* in any manner which it sees fit, without advising us and without affecting our liability under this Guarantee. This includes, without limitation, any extensions, indulgences, release or compromise granted to the *Contractor* or any variation under or to the Contract.

7. Should the *Employer* cede its rights against the *Contractor* to a third party where such cession is permitted under the Contract, then the *Employer* shall be entitled to cede to such third party the rights of the *Employer* under this Guarantee on written notification to the Bank of such cession.

8. This Guarantee:

8.1 shall expire on the Expiry Date until which time it is irrevocable;

8.2 is, save as provided for in **7** above, personal to the *Employer* and is neither negotiable nor transferable;

8.3 shall be returned to the Bank upon the earlier of payment of the full Guaranteed Sum or expiry hereof;

8.4 shall be regarded as a liquid document for the purpose of obtaining a court order; and

8.5 shall be governed by and construed in accordance with the law of the Republic of South Africa and shall be subject to the jurisdiction of the courts of the Republic of South Africa.

8.6 Any claim which arises or demand for payment received after expiry date will be invalid and unenforceable.

9. The Bank chooses domicilium citandi et executandi for all purposes in connection with this Guarantee at the Bank's Address.

Signed at _____ Date _____

For and behalf of the Bank

Bank Signatory: _____ Bank Signatory: _____

Witness: _____ Witness: _____
Bank's seal or stamp

PART 2: PRICING DATA

TSC3 Option A

Document reference	Title	No of pages
C2.1	Pricing assumptions: Option A	2
C2.2	The *price list*	**[27]**

C2.1 Pricing assumptions: Option A

How work is priced and assessed for payment

Clause 11 in NEC3 Term Service Contract (TSC3) core clauses and Option A states:

Identified and defined terms	11 11.2	(12) The Price List is the *price list* unless later changed in accordance with this contract. (17) The Price for Services Provided to Date is the total of • the Price for each lump sum item in the Price List which the *Contractor* has completed and • where a quantity is stated for an item in the Price List, an amount calculated by multiplying the quantity which the *Contractor* has completed by the rate. (19) The Prices are the amounts stated in the Price column of the Price List. Where a quantity is stated for an item in the Price List, the Price is calculated by multiplying the quantity by the rate.

This confirms that Option A is a priced contract where the Prices are derived from a list of items of service which can be priced as lump sums or as expected quantities of service multiplied by a rate or a mix of both.

Function of the Price List

Clause 54.1 in Option A states: “Information in the Price List is not Service Information”. This confirms that instructions to do work or how it is to be done are not included in the Price List but in the Service Information. This is further confirmed by Clause 20.1 which states, “The *Contractor* Provides the Service in accordance with the Service Information”. Hence the *Contractor* does **not** Provide the Service in accordance with the Price List. The Price List is only a pricing document.

Link to the *Contractor*’s plan

Clause 21.4 states “The *Contractor* provides information which shows how each item description on the Price List relates to the operations on each plan which he submits for acceptance”. Hence when compiling the *price list*, the tendering contractor needs to develop his first clause 21.2 plan in such a way that operations shown on it can be priced in the *price list* and result in a satisfactory cash flow in terms of clause 11.2(17).

Preparing the *price list*

Before preparing the *price list*, both the *Employer* and tendering contractors should read the TSC3 Guidance Notes pages 14 and 15. In an Option A contract, either Party may have entered items into the *price list* either as a process of offer and acceptance (tendering) or by negotiation depending on the nature of the *service* to be provided. Alternatively the *Employer*, in his Instructions to Tenderers or in a Tender Schedule, may have listed some items that he requires the *Contractor* to include in the *price list* to be prepared and priced by him.

It is assumed that in preparing or finalising the *price list* the *Contractor:*

- Has taken account of the guidance given in the TSC3 Guidance Notes relevant to Option A;

- Understands the function of the Price List and how work is priced and paid for;
- Is aware of the need to link operations shown in his plan to items shown in the Price List;
- Has listed and priced items in the *price list* which are inclusive of everything necessary and incidental to Providing the Service in accordance with the Service Information, as it was at the time of tender, as well as correct any Defects not caused by an *Employer's* risk;
- Has priced work he decides not to show as a separate item within the Prices or rates of other listed items in order to fulfil the obligation to complete the *service* for the tendered total of the Prices.
- Understands there is no adjustment to items priced as lump sums if the amount, or quantity, of work within that item later turns out to be different to that which the *Contractor* estimated at time of tender. The only basis for a change to the (lump sum) Prices is as a result of a compensation event.

Format of the *price list*

(From the example given in an Appendix within the TSC3 Guidance Notes)

Entries in the first four columns in the *price list* in section C2.2 are made either by the *Employer* or the tendering contractor.

If the *Contractor* is to be paid an amount for the item which is not adjusted if the quantity of work in the item changes, the tendering contractor enters the amount in the Price column only, the Unit, Expected Quantity and Rate columns being left blank.

If the *Contractor* is to be paid an amount for an item of work which is the rate for the work multiplied by the quantity completed, the tendering contractor enters the rate which is then multiplied by the Expected Quantity to produce the Price, which is also entered.

If the *Contractor* is to be paid a Price for an item proportional to the length of time for which a service is provided, a unit of time is stated in the Unit column and the expected length of time (as a quantity of the stated units of time) is stated in the Expected Quantity column.

C2.2 the *price list*

Quantities on table is based on the following assumptions:

Inputs - QTY		
	Type QTY	**Burner QTY**
Contractual	**1**	
GO/MGO	**5**	**24**
IR	**4**	**12**
IN	**8**	**2**
Spare burner/Maintenance	**1**	**12**
Very low ROF items	**5**	
Man Power - Weekdays	**1200**	
Man Power - Saturdays	**840**	
Man Power - Sunday/public holidays	**600**	

NOTE: All allowances and PPE should be including in the menu rate.

Tables in the detail scope of work should be price

Call Out reaction time/ period 12Hours

Contractual

Item	**Activity**	**Total QTY**	**Rate per item**	**Cost**
Contractual	Site Establishment	**1**		
Contractual	Site De-Establishment	**1**		
			Total	

Fabrication and Repair Pricelist

Code	Component and Part	Repair method	UoM	Total QTY	Rate per item	Cost
001001	SAID Ducting - Left	Replace	Each	**26**		
001001	SAID Ducting - Left	Window patch	m^2	**115**		
001002	SAID Ducting - Right	Replace	Each	**26**		
001002	SAID Ducting - Right	Window patch	m^2	**115**		
001003	SAID Ducting - Front	Replace	Each	**26**		
001003	SAID Ducting - Front	Window patch	m^2	**120**		
001004	SAID Ducting - Rear	Replace	Each	**26**		
001004	SAID Ducting - Rear	Window patch	m^2	**120**		
001005	SAID Outlet flange - Left	Replace	Each	**26**		
001005	SAID Outlet flange - Left	Window patch	m^2	**16**		
001006	SAID Outlet flange - Right	Replace	Each	**26**		
001006	SAID Outlet flange - Right	Window patch	m^2	**16**		
001007	SAID Outlet flange - Front	Replace	Each	**26**		
001007	SAID Outlet flange - Front	Window patch	m^2	**16**		
001008	SAID Outlet flange - Rear	Replace	Each	**26**		
001008	SAID Outlet flange - Rear	Window patch	m^2	**16**		
001009	SAID Core air tap off - Top - horizontal	Replace	Each	**26**		
001009	SAID Core air tap off - Top - horizontal	Window patch	m^2	**16**		
001010	SAID Core air tap off - Bottom - horizontal	Replace	Each	**26**		

Code	Component and Part	Repair method	UoM	Total QTY	Rate per item	Cost
001010	SAID Core air tap off - Bottom - horizontal	Window patch	m^2	**8**		
001011	SAID Core air tap off - Left - horizontal	Replace	Each	**26**		
001011	SAID Core air tap off - Left - horizontal	Window patch	m^2	**8**		
001012	SAID Core air tap off - right - horizontal	Replace	Each	**26**		
001012	SAID Core air tap off - right - horizontal	Window patch	m^2	**8**		
001013	SAID Core air tap off - Rear - angled	Replace	Each	**26**		
001013	SAID Core air tap off - Rear - angled	Window patch	m^2	**16**		
001014	SAID Core air tap off - Front - angled	Replace	Each	**26**		
001014	SAID Core air tap off - Front - angled	Window patch	m^2	**10**		
001015	SAID Core air tap off - Left - angled	Replace	Each	**26**		
001015	SAID Core air tap off - Left - angled	Window patch	m^2	**8**		
001016	SAID Core air tap off - right - angled	Replace	Each	**26**		
001016	SAID Core air tap off - right - angled	Window patch	m^2	**8**		
001017	SAID Core air tap off outlet flange - Left	Replace	Each	**26**		
001017	SAID Core air tap off outlet flange - Left	Window patch	m^2	**7**		
001018	SAID Core air tap off outlet flange - Right	Replace	Each	**26**		
001018	SAID Core air tap off outlet flange - Right	Window patch	m^2	**7**		
001019	SAID Core air tap off outlet flange - Front	Replace	Each	**26**		
001019	SAID Core air tap off outlet flange - Front	Window patch	m^2	**8**		
001020	SAID Core air tap off outlet flange - Rear	Replace	Each	**26**		

Code	Component and Part	Repair method	UoM	Total QTY	Rate per item	Cost
001020	SAID Core air tap off outlet flange - Rear	Window patch	m^2	**8**		
002001	SAD Casing (Front)	Window patch	m^2	**55**		
002001	SAD Casing (Front)	Weld build up	cm^3	**28345**		
002002	SAD Casing (Left)	Window patch	m^2	**59**		
002002	SAD Casing (Left)	Weld build up	cm^3	**30143**		
002003	SAD Casing (Rear)	Window patch	m^2	**55**		
002003	SAD Casing (Rear)	Weld build up	cm^3	**28345**		
002004	SAD Casing (Right)	Window patch	m^2	**59**		
002004	SAD Casing (Right)	Weld build up	cm^3	**30143**		
002005	SAD Casing - fasteners	Replace	Each	**1246**		
002005	SAD Casing - fasteners	Alignment / reinstalling	m	**8698**		
002006	SAD Front Vane	Replace	Each	**87**		
002006	SAD Front Vane	Window patch	m^2	**50**		
002006	SAD Front Vane	Alignment / reinstalling	m	**11**		
002007	SAD Rear Vane	Replace	Each	**87**		
002007	SAD Rear Vane	Window patch	m^2	**50**		
002007	SAD Rear Vane	Alignment / reinstalling	m	**11**		
002008	SAD front-rear dividing plate	Replace	Each	**87**		
002008	SAD front-rear dividing plate	Window patch	m^2	**16**		
002008	SAD front-rear dividing plate	Alignment / reinstalling	m	**11**		

Code	Component and Part	Repair method	UoM	Total QTY	Rate per item	Cost
002009	SAD Front Left Bearing	Replace	Each	**142**		
002009	SAD Front Left Bearing	Alignment / reinstalling	m	**46**		
002010	SAD Front Left Shaft	Replace	Each	**129**		
002010	SAD Front Left Shaft	Weld build up	cm^3	**115**		
002010	SAD Front Left Shaft	Alignment / reinstalling	m	**41**		
002011	SAD Front Left Seal	Replace	Each	**92**		
002011	SAD Front Left Seal	Window patch	m^2	**2**		
002012	SAD Front Right Bearing	Replace	Each	**142**		
002012	SAD Front Right Bearing	Alignment / reinstalling	m	**46**		
002013	SAD Front Right Shaft	Replace	Each	**129**		
002013	SAD Front Right Shaft	Weld build up	cm^3	**115**		
002013	SAD Front Right Shaft	Alignment / reinstalling	m	**41**		
002014	SAD Front Right Seal	Replace	Each	**92**		
002014	SAD Front Right Seal	Window patch	m^2	**2**		
002015	SAD Rear Left Bearing	Replace	Each	**142**		
002015	SAD Rear Left Bearing	Alignment / reinstalling	m	**46**		
002016	SAD Rear Left Shaft	Replace	Each	**129**		
002016	SAD Rear Left Shaft	Weld build up	cm^3	**115**		
002016	SAD Rear Left Shaft	Alignment / reinstalling	m	**41**		
002017	SAD Rear Left Seal	Replace	Each	**92**		

Code	Component and Part	Repair method	UoM	Total QTY	Rate per item	Cost
002017	SAD Rear Left Seal	Window patch	m^2	**2**		
002018	SAD Rear Right Bearing	Replace	Each	**142**		
002018	SAD Rear Right Bearing	Alignment / reinstalling	m	**46**		
002019	SAD Rear Right Shaft	Replace	Each	**129**		
002019	SAD Rear Right Shaft	Weld build up	cm^3	**115**		
002019	SAD Rear Right Shaft	Alignment / reinstalling	m	**41**		
002020	SAD Rear Right Seal	Replace	Each	**92**		
002020	SAD Rear Right Seal	Window patch	m^2	**2**		
002021	SAD Front Front seal	Replace	Each	**92**		
002021	SAD Front Front seal	Window patch	m^2	**2**		
002022	SAD Front Rear Seal	Replace	Each	**92**		
002022	SAD Front Rear Seal	Window patch	m^2	**2**		
002023	SAD Rear Front Seal	Replace	Each	**92**		
002023	SAD Rear Front Seal	Window patch	m^2	**2**		
002024	SAD Rear Rear Seal	Replace	Each	**92**		
002024	SAD Rear Rear Seal	Window patch	m^2	**2**		
002025	SAD Rear damper linking arm	Replace	Each	**26**		
002025	SAD Rear damper linking arm	Alignment / reinstalling	m	**165**		
002026	SAD Front damper linking arm	Replace	Each	**26**		
002026	SAD Front damper linking arm	Alignment / reinstalling	m	**165**		

Code	Component and Part	Repair method	UoM	Total QTY	Rate per item	Cost
002027	SAD Front damper actuator arm	Replace	Each	**26**		
002027	SAD Front damper actuator arm	Alignment / reinstalling	m	**165**		
003001	SAWB Rear bottom circular flange	Window patch	m^2	**64**		
003002	SAWB Rear top trapezium flange	Window patch	m^2	**69**		
003003	SAWB Rear plate studs	Replace	Each	**6636**		
003004	SAWB Rear plate Fasteners	Replace	Each	**840**		
003004	SAWB Rear plate Fasteners	Alignment / reinstalling	m	**5796**		
003005	SAWB Bottom Circular	Window patch	m^2	**552**		
003006	SAWB Side tapers (Left)	Window patch	m^2	**175**		
003007	SAWB Side tapers (Right)	Window patch	m^2	**175**		
003008	SAWB Damper flange (Front)	Replace	Each	**26**		
003008	SAWB Damper flange (Front)	Window patch	m^2	**16**		
003009	SAWB Damper flange (Left)	Replace	Each	**26**		
003009	SAWB Damper flange (Left)	Window patch	m^2	**16**		
003010	SAWB Damper flange (Rear)	Replace	Each	**26**		
003010	SAWB Damper flange (Rear)	Window patch	m^2	**16**		
003011	SAWB Damper flange (Right)	Replace	Each	**26**		
003011	SAWB Damper flange (Right)	Window patch	m^2	**16**		
003012	SAWB Damper flange - fasteners	Replace	Each	**1246**		
003012	SAWB Damper flange - fasteners	Alignment / reinstalling	m	**8698**		

Code	Component and Part	Repair method	UoM	Total QTY	Rate per item	Cost
003013	SAWB inspection hatch side walls	Replace	Each	**6**		
003013	SAWB inspection hatch side walls	Window patch	m^2	**1**		
003013	SAWB inspection hatch side walls	Alignment / reinstalling	m	**2**		
003014	SAWB inspection hatch door	Replace	Each	**10**		
003015	SAWB inspection hatch door hinges	Replace	Each	**47**		
003015	SAWB inspection hatch door hinges	Alignment / reinstalling	m	**14**		
003016	SAWB inspection hatch door locking mechanism	Replace	Each	**24**		
003016	SAWB inspection hatch door locking mechanism	Alignment / reinstalling	m	**7**		
003017	SAWB lifting lug - Left	Replace	Each	**20**		
003018	SAWB lifting lug - Right	Replace	Each	**20**		
003019	SAWB attachment lug for fixed support - Left	Replace	Each	**32**		
003020	SAWB attachment lug for fixed support - Right	Replace	Each	**32**		
003021	SAWB attachment lug for fixed support Saddle - Left	Replace	Each	**196**		
003022	SAWB attachment lug for fixed support Saddle - Right	Replace	Each	**196**		
003023	SAWB Front bottom circular casing	Window patch	m^2	**64**		
003024	SAWB Front top trapezium casing	Window patch	m^2	**69**		
003025	SAWB Front distance piece tube	Replace	Each	**2**		
003025	SAWB Front distance piece tube	Window patch	m^2	**10**		
003025	SAWB Front distance piece tube	Alignment / reinstalling	m	**1**		

Code	Component and Part	Repair method	UoM	Total QTY	Rate per item	Cost
003026	SAWB Cone mounting flange	Replace	Each	**26**		
003026	SAWB Cone mounting flange	Window patch	m^2	**69**		
003026	SAWB Cone mounting flange	Alignment / reinstalling	m	**16**		
003027	SAWB Cone mounting studs	Replace	Each	**6624**		
003028	SAWB Cone mounting fasteners	Replace	Each	**828**		
003028	SAWB Cone mounting fasteners	Alignment / reinstalling	m	**5796**		
003029	SAWB Mounting flange to tube nest casing	Replace	Each	**2**		
003029	SAWB Mounting flange to tube nest casing	Window patch	m^2	**5**		
003030	SAWB Mounting flange external gussets	Replace	Each	**160**		
003031	SAWB Inlet Internal stiffener Left	Replace	Each	**92**		
003031	SAWB Inlet Internal stiffener Left	Window patch	m^2	**26**		
003032	SAWB Inlet Internal stiffener Left Protection plate	Replace	Each	**92**		
003032	SAWB Inlet Internal stiffener Left Protection plate	Window patch	m^2	**11**		
003033	SAWB Inlet Internal stiffener Centre	Replace	Each	**92**		
003033	SAWB Inlet Internal stiffener Centre	Window patch	m^2	**26**		
003034	SAWB Inlet Internal stiffener Centre Protection plate	Replace	Each	**92**		
003034	SAWB Inlet Internal stiffener Centre Protection plate	Window patch	m^2	**11**		
003035	SAWB Inlet Internal stiffener Right	Replace	Each	**92**		
003035	SAWB Inlet Internal stiffener Right	Window patch	m^2	**26**		

Code	Component and Part	Repair method	UoM	Total QTY	Rate per item	Cost
003036	SAWB Inlet Internal stiffener Right Protection plate	Replace	Each	**92**		
003036	SAWB Inlet Internal stiffener Right Protection plate	Window patch	m^2	**11**		
004001	SAC Inlet flange	Replace	Each	**38**		
004001	SAC Inlet flange	Window patch	m^2	**16**		
004001	SAC Inlet flange	Alignment / reinstalling	m	**16**		
004002	SAC Cone	Replace	Each	**38**		
004002	SAC Cone	Window patch	m^2	**165**		
004002	SAC Cone	Alignment / reinstalling	m	**16**		
004003	SAC Tube	Replace	Each	**38**		
004003	SAC Tube	Window patch	m^2	**184**		
004003	SAC Tube	Alignment / reinstalling	m	**16**		
004004	SAC centralising pins	Replace	Each	**748**		
004004	SAC centralising pins	Reweld	m	**4**		
004004	SAC centralising pins	Alignment / reinstalling	m	**217**		
004005	SAC centralising pins saddles	Replace	Each	**932**		
004005	SAC centralising pins saddles	Reweld	m	**26**		
004006	SAC Mounting flange	Replace	Each	**38**		
004006	SAC Mounting flange	Window patch	m^2	**32**		
004006	SAC Mounting flange	Alignment / reinstalling	m	**16**		
004007	SAC mounting flange refractory	Replace	Each	**196**		

Code	Component and Part	Repair method	UoM	Total QTY	Rate per item	Cost
005001	TNBC Rear Octagon flange	Window patch	m^2	**22**		
005002	TNBC Rear Octagon side - Small	Replace	Each	**6**		
005002	TNBC Rear Octagon side - Small	Window patch	m^2	**13**		
005002	TNBC Rear Octagon side - Small	Alignment / reinstalling	m	**3**		
005003	TNBC Rear Octagon side - Medium	Replace	Each	**6**		
005003	TNBC Rear Octagon side - Medium	Window patch	m^2	**19**		
005003	TNBC Rear Octagon side - Medium	Alignment / reinstalling	m	**3**		
005004	TNBC Rear Octagon side - Large	Replace	Each	**6**		
005004	TNBC Rear Octagon side - Large	Window patch	m^2	**21**		
005004	TNBC Rear Octagon side - Large	Alignment / reinstalling	m	**3**		
005005	TNBC Rear Octagon side - X-Large	Replace	Each	**6**		
005005	TNBC Rear Octagon side - X-Large	Window patch	m^2	**23**		
005005	TNBC Rear Octagon side - X-Large	Alignment / reinstalling	m	**3**		
005006	TNBC Rear flange studs for SAWB	Replace	Each	**40**		
005007	TNBC Rear flange fasteners for SAWB	Replace	Each	**40**		
005008	TNBC Octagon Internal Gusset	Replace	Each	**2208**		
005009	TNBC Octagon external stiffeners	Replace	Each	**160**		
005010	TNBC Octagon angle iron for mounting to tube wall - small	Replace	Each	**31**		
005010	TNBC Octagon angle iron for mounting to tube wall - small	Alignment / reinstalling	m	**10**		

Code	Component and Part	Repair method	UoM	Total QTY	Rate per item	Cost
005011	TNBC Octagon angle iron for mounting to tube wall - Medium	Replace	Each	**31**		
005011	TNBC Octagon angle iron for mounting to tube wall - Medium	Alignment / reinstalling	m	**10**		
005012	TNBC Octagon angle iron for mounting to tube wall - Large	Replace	Each	**31**		
005012	TNBC Octagon angle iron for mounting to tube wall - Large	Alignment / reinstalling	m	**10**		
005013	TNBC Octagon angle iron for mounting to tube wall - X-large	Replace	Each	**31**		
005013	TNBC Octagon angle iron for mounting to tube wall - X-large	Alignment / reinstalling	m	**10**		
005014	TNB internal, tube external refractory	Replace	Each	**30**		
006001	BS Swivel	Replace	Each	**62**		
006001	BS Swivel	Alignment / reinstalling	m	**326**		
006002	BS fasteners	Replace	Each	**62**		
006002	BS fasteners	Alignment / reinstalling	m	**326**		
006003	BS Long pipe assembly	Replace	Each	**62**		
006003	BS Long pipe assembly	Alignment / reinstalling	m	**326**		
006004	BS Short pipe assembly	Replace	Each	**62**		
006004	BS Short pipe assembly	Alignment / reinstalling	m	**326**		
006005	BS Swivel connecting pin with split pins	Replace	Each	**62**		
006005	BS Swivel connecting pin with split pins	Alignment / reinstalling	m	**326**		
007001	SASE flange distance piece front flange	Replace	Each	**70**		
007001	SASE flange distance piece front flange	Alignment / reinstalling	m	**21**		

Code	Component and Part	Repair method	UoM	Total QTY	Rate per item	Cost
007002	SASE flange distance piece rear reinforcement tube	Replace	Each	**70**		
007002	SASE flange distance piece rear reinforcement tube	Alignment / reinstalling	m	**21**		
007003	SASE flange distance piece pipe	Replace	Each	**70**		
007003	SASE flange distance piece pipe	Alignment / reinstalling	m	**21**		
007004	SASE flange distance piece rear flange	Replace	Each	**70**		
007004	SASE flange distance piece rear flange	Alignment / reinstalling	m	**21**		
007005	SASE external large flange	Replace	Each	**2**		
007005	SASE external large flange	Window patch	m^2	**2**		
007006	SASE Main gearbox	Alignment / reinstalling	m	**184**		
007007	SASE Secondary gearbox	Alignment / reinstalling	m	**368**		
007008	SASE Secondary gearbox links	Replace	Each	**50**		
007008	SASE Secondary gearbox links	Alignment / reinstalling	m	**326**		
007009	SASE Secondary gearbox - universal joint (1.25x3.75 inch)	Replace	Each	**92**		
007009	SASE Secondary gearbox - universal joint (1.25x3.75 inch)	Alignment / reinstalling	m	**644**		
007010	SASE Position sleeve with flange, rib and lock nut	Alignment / reinstalling	m	**184**		
007011	SASE Secondary gearbox extending rod covers	Alignment / reinstalling	m	**368**		
007012	SASI adjusting ratchet	Alignment / reinstalling	m	**184**		
008001	SASI cone	Replace	Each	**38**		
008001	SASI cone	Window patch	m^2	**156**		

Code	Component and Part	Repair method	UoM	Total QTY	Rate per item	Cost
008002	SASI cone flange	Replace	Each	**38**		
008002	SASI cone flange	Window patch	m^2	**16**		
008003	SASI inner ring	Replace	Each	**38**		
008003	SASI inner ring	Window patch	m^2	**2**		
008004	SASI Adjusting rod - unthreaded	Replace	Each	**85**		
008004	SASI Adjusting rod - unthreaded	Alignment / reinstalling	m	**483**		
008005	SASI Adjusting rod - threaded	Replace	Each	**85**		
008005	SASI Adjusting rod - threaded	Alignment / reinstalling	m	**483**		
008006	SASI Adjusting rod - universal joint (2x5.44 inch)	Replace	Each	**85**		
008006	SASI Adjusting rod - universal joint (2x5.44 inch)	Alignment / reinstalling	m	**483**		
008007	SASI sliding wheels link	Replace	Each	**154**		
008007	SASI sliding wheels link	Alignment / reinstalling	m	**46**		
008008	SASI wheels	Replace	Each	**578**		
008008	SASI wheels	Alignment / reinstalling	m	**170**		
008009	SASI wheels fasteners	Replace	Each	**293**		
008009	SASI wheels fasteners	Alignment / reinstalling	m	**87**		
008010	SASI Position indicator	Replace	Each	**154**		
008010	SASI Position indicator	Alignment / reinstalling	m	**46**		
008011	SASI Vane	Replace	Each	**2279**		
008011	SASI Vane	Alignment / reinstalling	m	**677**		

Code	Component and Part	Repair method	UoM	Total QTY	Rate per item	Cost
009001	PFI Outlet flange - Left	Replace	Each	**92**		
009001	PFI Outlet flange - Left	Window patch	m^2	**7**		
009002	PFI Outlet flange - Right	Replace	Each	**92**		
009002	PFI Outlet flange - Right	Window patch	m^2	**7**		
009003	PFI Outlet flange - Front	Replace	Each	**92**		
009003	PFI Outlet flange - Front	Window patch	m^2	**8**		
009004	PFI Outlet flange - Rear	Replace	Each	**92**		
009004	PFI Outlet flange - Rear	Window patch	m^2	**8**		
009005	PFI Outlet flange - Gusset	Replace	Each	**1840**		
009005	PFI Outlet flange - Gusset	Window patch	m^2	**8**		
009006	PFI inlet round to square - Left front corner	Window patch	m^2	**22**		
009006	PFI inlet round to square - Left front corner	Reweld	m	**41**		
009007	PFI inlet round to square - Right front corner	Window patch	m^2	**22**		
009007	PFI inlet round to square - Right front corner	Reweld	m	**41**		
009008	PFI inlet round to square - Left rear corner	Window patch	m^2	**22**		
009008	PFI inlet round to square - Left rear corner	Reweld	m	**41**		
009009	PFI inlet round to square - Right rear corner	Window patch	m^2	**22**		
009009	PFI inlet round to square - Right rear corner	Reweld	m	**41**		

Code	Component and Part	Repair method	UoM	Total QTY	Rate per item	Cost
009010	PFI inlet round to square - Left straight insert	Window patch	m^2	**5**		
009010	PFI inlet round to square - Left straight insert	Reweld	m	**16**		
009011	PFI inlet round to square - Right straight insert	Window patch	m^2	**5**		
009011	PFI inlet round to square - Right straight insert	Reweld	m	**16**		
009012	PFI inlet round to square - Front straight insert	Window patch	m^2	**7**		
009012	PFI inlet round to square - Front straight insert	Reweld	m	**16**		
009013	PFI inlet round to square - Rear straight insert	Window patch	m^2	**7**		
009013	PFI inlet round to square - Rear straight insert	Reweld	m	**16**		
009014	PFI pipe up to cut off plate	Window patch	m^2	**304**		
010001	PF Burner Tip	Replace	Each	**104**		
010001	PF Burner Tip	Window patch	m^2	**32**		
010001	PF Burner Tip	Reweld	m	**32**		
010001	PF Burner Tip	Weld build up	cm^3	**20912**		
010001	PF Burner Tip	Alignment / reinstalling	m	**31**		
010002	PF Burner centralising plate for core air	Replace	Each	**932**		
010002	PF Burner centralising plate for core air	Reweld	m	**26**		
010003	PF burner tube	Replace	Each	**109**		
010003	PF burner tube	Window patch	m^2	**55**		

Code	Component and Part	Repair method	UoM	Total QTY	Rate per item	Cost
010003	PF burner tube	Reweld	m	**37**		
010003	PF burner tube	Alignment / reinstalling	m	**32**		
010004	PF burner ring	Replace	Each	**154**		
010004	PF burner ring	Alignment / reinstalling	m	**46**		
010005	PF burner tube Liner back casing	Replace	Each	**104**		
010005	PF burner tube Liner back casing	Window patch	m^2	**64**		
010006	PF burner tube Liner bottom casing	Replace	Each	**95**		
010006	PF burner tube Liner bottom casing	Window patch	m^2	**32**		
010006	PF burner tube Liner bottom casing	Reweld	m	**26**		
010007	PF burner tube liner transition - Left	Replace	Each	**196**		
010008	PF burner tube liner transition - Right	Replace	Each	**196**		
010009	PF burner top liner backing cone	Replace	Each	**38**		
010009	PF burner top liner backing cone	Window patch	m^2	**59**		
010010	PF burner bottom cone	Replace	Each	**90**		
010010	PF burner bottom cone	Window patch	m^2	**16**		
010010	PF burner bottom cone	Reweld	m	**17**		
010010	PF burner bottom cone	Weld build up	cm^3	**4885**		
010011	PF burner cone liner transition - Left	Replace	Each	**196**		
010012	PF burner cone liner transition - Right	Replace	Each	**196**		
010013	PF burner inlet liner backing tube	Window patch	m^2	**147**		

Code	Component and Part	Repair method	UoM	Total QTY	Rate per item	Cost
010013	PF burner inlet liner backing tube	Reweld	m	**73**		
010013	PF burner inlet liner backing tube	Alignment / reinstalling	m	**16**		
010014	PF burner inlet - Left	Window patch	m^2	**3**		
010014	PF burner inlet - Left	Alignment / reinstalling	m	**1**		
010015	PF burner inlet - Right	Window patch	m^2	**3**		
010015	PF burner inlet - Right	Alignment / reinstalling	m	**1**		
010016	PF Burner inlet - Rear	Window patch	m^2	**134**		
010016	PF Burner inlet - Rear	Weld build up	cm^3	**56764**		
010017	PF burner inlet - Front	Window patch	m^2	**8**		
010017	PF burner inlet - Front	Weld build up	cm^3	**3085**		
010018	PF Burner Core air studs	Replace	Each	**2220**		
010019	PF burner Left C-Door studs	Replace	Each	**1668**		
010020	PF burner Right C-Door studs	Replace	Each	**1668**		
010021	PF Burner Core air Fasteners	Replace	Each	**288**		
010021	PF Burner Core air Fasteners	Alignment / reinstalling	m	**1932**		
010022	PF burner Left C-Door Fasteners	Replace	Each	**219**		
010022	PF burner Left C-Door Fasteners	Alignment / reinstalling	m	**1453**		
010023	PF burner Right C-Door Fasteners	Replace	Each	**219**		
010023	PF burner Right C-Door Fasteners	Alignment / reinstalling	m	**1453**		
010024	PF Burner C-Door (Outer)	Replace	Each	**62**		

Code	Component and Part	Repair method	UoM	Total QTY	Rate per item	Cost
010024	PF Burner C-Door (Outer)	Window patch	m^2	**8**		
010024	PF Burner C-Door (Outer)	Weld build up	cm^3	**2779**		
010025	PF Burner C-Door (Inner)	Replace	Each	**62**		
010025	PF Burner C-Door (Inner)	Window patch	m^2	**7**		
010025	PF Burner C-Door (Inner)	Weld build up	cm^3	**1656**		
010026	PF Burner inlet flange - Front	Replace	Each	**38**		
010026	PF Burner inlet flange - Front	Window patch	m^2	**11**		
010026	PF Burner inlet flange - Front	Alignment / reinstalling	m	**16**		
010027	PF Burner inlet flange - Rear	Replace	Each	**38**		
010027	PF Burner inlet flange - Rear	Window patch	m^2	**11**		
010027	PF Burner inlet flange - Rear	Alignment / reinstalling	m	**16**		
010028	PF Burner inlet flange - Left	Replace	Each	**38**		
010028	PF Burner inlet flange - Left	Window patch	m^2	**8**		
010028	PF Burner inlet flange - Left	Alignment / reinstalling	m	**16**		
010029	PF Burner inlet flange - Right	Replace	Each	**38**		
010029	PF Burner inlet flange - Right	Window patch	m^2	**8**		
010029	PF Burner inlet flange - Right	Alignment / reinstalling	m	**16**		
010030	PF Burner inlet flange gusset - large	Replace	Each	**2279**		
010030	PF Burner inlet flange gusset - large	Alignment / reinstalling	m	**677**		
010031	PF Burner inlet flange gusset - small	Replace	Each	**1994**		

Code	Component and Part	Repair method	UoM	Total QTY	Rate per item	Cost
010031	PF Burner inlet flange gusset - small	Alignment / reinstalling	m	**594**		
010032	PF Burner mounting flange	Window patch	m^2	**170**		
010032	PF Burner mounting flange	Weld build up	cm^3	**83840**		
010033	PF Burner swirler gland cover pipe	Replace	Each	**102**		
010034	PF Burner swirler gland cover Flange	Replace	Each	**102**		
010035	PF Burner swirler gland - female	Replace	Each	**102**		
010036	PF Burner swirler gland - male	Replace	Each	**102**		
010037	PF Burner swirler wheels rail base	Replace	Each	**154**		
010037	PF Burner swirler wheels rail base	Alignment / reinstalling	m	**46**		
010038	PF Burner swirler wheels rail support	Replace	Each	**154**		
010038	PF Burner swirler wheels rail support	Alignment / reinstalling	m	**46**		
010039	PF Burner swirler wheels rail rod	Replace	Each	**196**		
010040	PF Burner Left Lifting beam	Replace	Each	**22**		
010041	PF Burner Cone external gusset to mounting flange	Replace	Each	**1116**		
010042	PF Burner Right Lifting beam	Replace	Each	**22**		
010043	PF Burner Top front external lifting lug	Replace	Each	**196**		
010044	PF Burner Top mounting flange internal lifting lug	Replace	Each	**196**		
011001	PF liners Row A	Replace	Each	**2133**		
011001	PF liners Row A	Alignment / reinstalling	m	**639**		
011002	PF liners Row A - Fastener set	Replace	Each	**2772**		

Code	Component and Part	Repair method	UoM	Total QTY	Rate per item	Cost
011003	PF liners Row A - Suite/sweet/filler cap	Replace	Each	**2772**		
011004	PF liners Row B	Replace	Each	**2279**		
011004	PF liners Row B	Alignment / reinstalling	m	**677**		
011005	PF liners Row C	Replace	Each	**2279**		
011005	PF liners Row C	Alignment / reinstalling	m	**677**		
011006	PF liners Row D	Replace	Each	**2279**		
011006	PF liners Row D	Alignment / reinstalling	m	**677**		
011007	PF liners Row D - Fastener	Replace	Each	**2956**		
011008	PF liners Row D - Suite/sweet/filler cap	Replace	Each	**2956**		
011009	PF liners Row E	Replace	Each	**2279**		
011009	PF liners Row E	Alignment / reinstalling	m	**677**		
011010	PF liner Row FL	Replace	Each	**154**		
011010	PF liner Row FL	Alignment / reinstalling	m	**46**		
011011	PF liner Row FR	Replace	Each	**154**		
011011	PF liner Row FR	Alignment / reinstalling	m	**46**		
011012	PF liner Row GL	Replace	Each	**439**		
011012	PF liner Row GL	Alignment / reinstalling	m	**125**		
011013	PF liner Row GR	Replace	Each	**439**		
011013	PF liner Row GR	Alignment / reinstalling	m	**125**		
011014	PF liner Row HL	Replace	Each	**439**		

Code	Component and Part	Repair method	UoM	Total QTY	Rate per item	Cost
011014	PF liner Row HL	Alignment / reinstalling	m	**125**		
011015	PF liner Row HR	Replace	Each	**439**		
011015	PF liner Row HR	Alignment / reinstalling	m	**125**		
011016	PF liners Inlet - Bolts	Replace	Each	**6636**		
012001	CADI Inlet flange - Left	Replace	Each	**26**		
012001	CADI Inlet flange - Left	Window patch	m^2	**7**		
012002	CADI Inlet flange - Right	Replace	Each	**26**		
012002	CADI Inlet flange - Right	Window patch	m^2	**7**		
012003	CADI Inlet flange - Front	Replace	Each	**26**		
012003	CADI Inlet flange - Front	Window patch	m^2	**8**		
012004	CADI Inlet flange - Rear	Replace	Each	**26**		
012004	CADI Inlet flange - Rear	Window patch	m^2	**8**		
012005	CADI Inlet flange - Fasteners	Replace	Each	**644**		
012005	CADI Inlet flange - Fasteners	Alignment / reinstalling	m	**4508**		
012006	CADI Ducting - Left	Replace	Each	**26**		
012006	CADI Ducting - Left	Window patch	m^2	**37**		
012007	CADI Ducting - Right	Replace	Each	**26**		
012007	CADI Ducting - Right	Window patch	m^2	**37**		
012008	CADI Ducting - Front	Replace	Each	**26**		
012008	CADI Ducting - Front	Window patch	m^2	**69**		

Code	Component and Part	Repair method	UoM	Total QTY	Rate per item	Cost
012009	CADI Ducting - Rear	Replace	Each	**26**		
012009	CADI Ducting - Rear	Window patch	m^2	**69**		
012010	CADI Outlet flange - Left	Replace	Each	**26**		
012010	CADI Outlet flange - Left	Window patch	m^2	**7**		
012011	CADI Outlet flange - Right	Replace	Each	**26**		
012011	CADI Outlet flange - Right	Window patch	m^2	**7**		
012012	CADI Outlet flange - Front	Replace	Each	**26**		
012012	CADI Outlet flange - Front	Window patch	m^2	**8**		
012013	CADI Outlet flange - Rear	Replace	Each	**26**		
012013	CADI Outlet flange - Rear	Window patch	m^2	**8**		
013001	CAD Casing - Left	Replace	Each	**26**		
013001	CAD Casing - Left	Window patch	m^2	**11**		
013001	CAD Casing - Left	Weld build up	cm^3	**4190**		
013002	CAD Casing - Right	Replace	Each	**26**		
013002	CAD Casing - Right	Window patch	m^2	**11**		
013002	CAD Casing - Right	Weld build up	cm^3	**4190**		
013003	CAD Casing - Front	Replace	Each	**22**		
013003	CAD Casing - Front	Window patch	m^2	**16**		
013003	CAD Casing - Front	Reweld	m	**10**		
013003	CAD Casing - Front	Weld build up	cm^3	**5079**		

Code	Component and Part	Repair method	UoM	Total QTY	Rate per item	Cost
013004	CAD Casing - Rear	Replace	Each	**22**		
013004	CAD Casing - Rear	Window patch	m^2	**16**		
013004	CAD Casing - Rear	Reweld	m	**10**		
013004	CAD Casing - Rear	Weld build up	cm^3	**5079**		
013005	CAD Casing - Fasteners	Replace	Each	**644**		
013005	CAD Casing - Fasteners	Alignment / reinstalling	m	**4508**		
013006	CAD DE Bearing	Replace	Each	**184**		
013007	CAD DE Bearing Mounting bracket	Replace	Each	**184**		
013008	CAD Gland follower Female	Replace	Each	**26**		
013008	CAD Gland follower Female	Alignment / reinstalling	m	**165**		
013009	CAD Gland follower - Male (DE - holed)	Replace	Each	**26**		
013009	CAD Gland follower - Male (DE - holed)	Alignment / reinstalling	m	**165**		
013010	CAD Gland follower - Male (NDE - blind	Replace	Each	**26**		
013010	CAD Gland follower - Male (NDE - blind	Alignment / reinstalling	m	**165**		
013011	CAD Gland follower packing	Replace	Each	**26**		
013011	CAD Gland follower packing	Alignment / reinstalling	m	**165**		
013012	CAD Vane	Replace	Each	**184**		
013012	CAD Vane	Window patch	m^2	**16**		
013013	CAD Vane Sleeve	Replace	Each	**184**		
013014	CAD Seal - Left	Replace	Each	**92**		

Code	Component and Part	Repair method	UoM	Total QTY	Rate per item	Cost
013014	CAD Seal - Left	Window patch	m^2	**2**		
013015	CAD Seal - Right	Replace	Each	**184**		
013015	CAD Seal - Right	Window patch	m^2	**2**		
013016	CAD Seal - Front	Replace	Each	**276**		
013016	CAD Seal - Front	Window patch	m^2	**3**		
013017	CAD Seal - Rear	Replace	Each	**368**		
013017	CAD Seal - Rear	Window patch	m^2	**3**		
013018	CAD Shaft	Replace	Each	**92**		
013018	CAD Shaft	Window patch	m^2	**2**		
013019	CAD DE Arm	Replace	Each	**26**		
013019	CAD DE Arm	Alignment / reinstalling	m	**165**		
014001	CADB Inlet flange - Left	Replace	Each	**26**		
014001	CADB Inlet flange - Left	Window patch	m^2	**7**		
014002	CADB Inlet flange - Right	Replace	Each	**26**		
014002	CADB Inlet flange - Right	Window patch	m^2	**7**		
014003	CADB Inlet flange - Front	Replace	Each	**26**		
014003	CADB Inlet flange - Front	Window patch	m^2	**8**		
014004	CADB Inlet flange - Rear	Replace	Each	**26**		
014004	CADB Inlet flange - Rear	Window patch	m^2	**8**		
014005	CADB Inlet flange - Fasteners	Replace	Each	**644**		

Code	Component and Part	Repair method	UoM	Total QTY	Rate per item	Cost
014005	CADB Inlet flange - Fasteners	Alignment / reinstalling	m	**4508**		
014006	CADB Ducting above bend - Left	Replace	Each	**22**		
014006	CADB Ducting above bend - Left	Window patch	m^2	**8**		
014006	CADB Ducting above bend - Left	Reweld	m	**8**		
014006	CADB Ducting above bend - Left	Weld build up	cm^3	**1656**		
014007	CADB Ducting above bend - Right	Replace	Each	**22**		
014007	CADB Ducting above bend - Right	Window patch	m^2	**8**		
014007	CADB Ducting above bend - Right	Reweld	m	**8**		
014007	CADB Ducting above bend - Right	Weld build up	cm^3	**1656**		
014008	CADB Ducting above bend - Front	Replace	Each	**26**		
014008	CADB Ducting above bend - Front	Window patch	m^2	**16**		
014008	CADB Ducting above bend - Front	Weld build up	cm^3	**3970**		
014009	CADB Ducting above bend - Rear	Replace	Each	**26**		
014009	CADB Ducting above bend - Rear	Window patch	m^2	**41**		
014009	CADB Ducting above bend - Rear	Weld build up	cm^3	**9802**		
014010	CADB Ducting below bend - Left	Replace	Each	**22**		
014010	CADB Ducting below bend - Left	Window patch	m^2	**16**		
014010	CADB Ducting below bend - Left	Reweld	m	**26**		
014010	CADB Ducting below bend - Left	Weld build up	cm^3	**4255**		
014011	CADB Ducting below bend - Right	Replace	Each	**22**		

Code	Component and Part	Repair method	UoM	Total QTY	Rate per item	Cost
014011	CADB Ducting below bend - Right	Window patch	m^2	**11**		
014011	CADB Ducting below bend - Right	Reweld	m	**22**		
014011	CADB Ducting below bend - Right	Weld build up	cm^3	**2861**		
014012	CADB Ducting below bend - Front	Replace	Each	**22**		
014012	CADB Ducting below bend - Front	Window patch	m^2	**16**		
014012	CADB Ducting below bend - Front	Reweld	m	**16**		
014012	CADB Ducting below bend - Front	Weld build up	cm^3	**4076**		
014013	CADB Ducting below bend - Rear	Replace	Each	**22**		
014013	CADB Ducting below bend - Rear	Window patch	m^2	**16**		
014013	CADB Ducting below bend - Rear	Reweld	m	**16**		
014013	CADB Ducting below bend - Rear	Weld build up	cm^3	**4076**		
014014	CADB Outlet flange - Left	Replace	Each	**26**		
014014	CADB Outlet flange - Left	Window patch	m^2	**7**		
014015	CADB Outlet flange - Right	Replace	Each	**26**		
014015	CADB Outlet flange - Right	Window patch	m^2	**7**		
014016	CADB Outlet flange - Front	Replace	Each	**26**		
014016	CADB Outlet flange - Front	Window patch	m^2	**8**		
014017	CADB Outlet flange - Rear	Replace	Each	**26**		
014017	CADB Outlet flange - Rear	Window patch	m^2	**8**		
014018	CADB calibration tap off socket - 3/4 inch	Replace	Each	**184**		

Code	Component and Part	Repair method	UoM	Total QTY	Rate per item	Cost
015001	Core air tip	Replace	Each	**104**		
015001	Core air tip	Window patch	m^2	**16**		
015001	Core air tip	Reweld	m	**22**		
015001	Core air tip	Weld build up	cm^3	**11201**		
015001	Core air tip	Alignment / reinstalling	m	**31**		
015002	Core air tube	Replace	Each	**109**		
015002	Core air tube	Window patch	m^2	**41**		
015002	Core air tube	Reweld	m	**32**		
015002	Core air tube	Alignment / reinstalling	m	**32**		
015003	Core air sleeved internal	Replace	Each	**118**		
015003	Core air sleeved internal	Window patch	m^2	**64**		
015003	Core air sleeved internal	Alignment / reinstalling	m	**32**		
015004	Core air sleeve	Replace	Each	**109**		
015004	Core air sleeve	Window patch	m^2	**59**		
015004	Core air sleeve	Reweld	m	**69**		
015004	Core air sleeve	Alignment / reinstalling	m	**32**		
015005	Core air external	Replace	Each	**99**		
015005	Core air external	Window patch	m^2	**64**		
015005	Core air external	Alignment / reinstalling	m	**11**		
015006	Core air inlet - Front	Window patch	m^2	**16**		

Code	Component and Part	Repair method	UoM	Total QTY	Rate per item	Cost
015006	Core air inlet - Front	Reweld	m	**16**		
015006	Core air inlet - Front	Weld build up	cm^3	**4458**		
015007	Core air inlet - Rear	Window patch	m^2	**16**		
015007	Core air inlet - Rear	Reweld	m	**16**		
015007	Core air inlet - Rear	Weld build up	cm^3	**4458**		
015008	Core air inlet - Left	Window patch	m^2	**17**		
015008	Core air inlet - Left	Reweld	m	**32**		
015008	Core air inlet - Left	Weld build up	cm^3	**4614**		
015009	Core air inlet - Right	Window patch	m^2	**17**		
015009	Core air inlet - Right	Reweld	m	**32**		
015009	Core air inlet - Right	Weld build up	cm^3	**4614**		
015010	Core air inlet air flange - Left	Replace	Each	**141**		
015010	Core air inlet air flange - Left	Weld build up	cm^3	**529**		
015010	Core air inlet air flange - Left	Alignment / reinstalling	m	**41**		
015011	Core air inlet air flange - Right	Replace	Each	**141**		
015011	Core air inlet air flange - Right	Weld build up	cm^3	**529**		
015011	Core air inlet air flange - Right	Alignment / reinstalling	m	**41**		
015012	Core air inlet air flange - Front	Replace	Each	**141**		
015012	Core air inlet air flange - Front	Weld build up	cm^3	**800**		
015012	Core air inlet air flange - Front	Alignment / reinstalling	m	**41**		

Code	Component and Part	Repair method	UoM	Total QTY	Rate per item	Cost
015013	Core air inlet air flange - Rear	Replace	Each	**141**		
015013	Core air inlet air flange - Rear	Weld build up	cm^3	**800**		
015013	Core air inlet air flange - Rear	Alignment / reinstalling	m	**41**		
015014	Core air inlet air flange - Fasteners	Replace	Each	**656**		
015014	Core air inlet air flange - Fasteners	Alignment / reinstalling	m	**4508**		
015015	Core air mounting flange	Replace	Each	**104**		
015015	Core air mounting flange	Window patch	m^2	**8**		
015016	Core air scroll mounting flange	Replace	Each	**104**		
015016	Core air scroll mounting flange	Window patch	m^2	**7**		
016001	FSMF	Replace	Each	**104**		
016001	FSMF	Window patch	m^2	**16**		
016002	FSMF fasteners	Replace	Each	**2560**		
016002	FSMF fasteners	Alignment / reinstalling	m	**764**		
016003	FSMF alignment ring to core air	Replace	Each	**196**		
016004	FSMF centre guide pipe	Replace	Each	**196**		
016005	FSMF centre pipe gland follower female	Replace	Each	**196**		
016006	FSMF Gusset	Replace	Each	**564**		
016007	FSMF centre pipe inner alignment ring	Replace	Each	**196**		
016008	FSMF flame scanner pipe	Replace	Each	**380**		
016009	FSMF Flame scanner - 1.5 inch Socket weld union	Replace	Each	**196**		

Code	Component and Part	Repair method	UoM	Total QTY	Rate per item	Cost
016010	FSMF Flame scanner threaded pipe with purge tap-in	Replace	Each	**380**		
016011	FSMF flame scanner pipe end cap	Replace	Each	**380**		
016012	FSMF inspection pipe	Replace	Each	**196**		
016013	FSMF inspection pipe reducer with external thread	Replace	Each	**196**		
016014	FSMF inspection pipe end cap with view glass	Replace	Each	**196**		
016015	FSMF refractory	Replace	Each	**196**		
017001	FOS Tube	Replace	Each	**104**		
017001	FOS Tube	Window patch	m^2	**106**		
017002	FOS swirler outer ring	Replace	Each	**99**		
017002	FOS swirler outer ring	Window patch	m^2	**8**		
017002	FOS swirler outer ring	Alignment / reinstalling	m	**11**		
017003	FOS swirler vanes	Replace	Each	**932**		
017003	FOS swirler vanes	Window patch	m^2	**8**		
017004	FOS Swirler inner ring with locking nuts	Replace	Each	**99**		
017004	FOS Swirler inner ring with locking nuts	Window patch	m^2	**8**		
017004	FOS Swirler inner ring with locking nuts	Alignment / reinstalling	m	**11**		
017005	FOS Spider ring with locking nut	Replace	Each	**154**		
017005	FOS Spider ring with locking nut	Alignment / reinstalling	m	**46**		
017006	FOS spider support rods	Replace	Each	**472**		

Code	Component and Part	Repair method	UoM	Total QTY	Rate per item	Cost
017006	FOS spider support rods	Reweld	m	**3**		
017007	FOS Gland follower male	Replace	Each	**38**		
017007	FOS Gland follower male	Alignment / reinstalling	m	**165**		
017008	FOS ventilating flange	Replace	Each	**196**		
017009	FOS ventilating block with carrier tube guide and lock nut	Replace	Each	**38**		
017009	FOS ventilating block with carrier tube guide and lock nut	Alignment / reinstalling	m	**165**		
018001	CT Oil lance	Replace	Each	**99**		
018001	CT Oil lance	Window patch	m^2	**41**		
018001	CT Oil lance	Alignment / reinstalling	m	**11**		
018002	CT Oil lance block mounting flange	Replace	Each	**196**		
018003	CT Ignitor lance	Replace	Each	**99**		
018003	CT Ignitor lance	Window patch	m^2	**32**		
018003	CT Ignitor lance	Alignment / reinstalling	m	**11**		
018004	CT supports internal of scroll	Replace	Each	**196**		
					Total	

Remove and install Pricelist

Original list	Acronym	Component description	Total QTY	Rate per item	Cost
4	SAC	Secondary Air Cone	**196**		
6	BS	Burner supports	**40**		
7	SASE	Secondary air swirler external	**196**		
8	SASI	Secondary air swirler Internal	**196**		
9	PFI	PF inlet	**40**		
10	PFB	Pulverised Fuel Burner	**196**		
12	CADI	Core air Ducting insert	**40**		
13	CAD	Core air damper	**196**		
14	CADB	Core air ducting bend	**196**		
15	CA	Core air	**196**		
16	FSMF	Fuel oil Scroll Mounting Flange	**196**		
17	FOS	Fuel oil Scroll	**196**		
18	CT	Carrier tube	**196**		
20	PFHR	Plat form hand rails	**98**		
				Total	

Provision for additional Scope of Work

Provision for additional Scope of Work	**QTY**	**1200**	**840**	**600**	
Task grade	**QTY per task grade**	**Normal day rate per hour**	**Overtime normal and Saturday rate per hour**	**Sunday and Public holiday rate per hour**	**Total per task grade**
Site manager	1				
Supervisor fitting / boiler making	1				
Supervisor welding	1				
Quality Controller	1				
Planner	1				
Fitter	4				
Welder	4				
Welder Assistant	4				
Boilermaker	4				
Boilermaker Assistant	4				
Semiskilled	4				
Rigger	2				
Rigger Assistant	2				
Safety Officer	1				
Store man	1				
				Total	

$$\boldsymbol{QTY_{TaskGrade} * \left(Rate_{Normal} * 1200 + Rate_{Overtime\&Saturday} * 840 + Rate_{Sunday\&PublicHoliday} * 600\right) = Total}$$

Note:

Tenderers shall allow in their rates for the cost of all consumables, materials, labour, transport, profit and all other costs which may be incurred in the proper execution of the works (access, compressed air, water, electricity etc.). This could also include, but not limited to levies payable to any industrial councils, associations, etc. that may be due by the tenderer, the cost of compliance to legislation, for instance regarding Health and Safety, compliance with Labour Legislation, etc.

Tenderers rates detail breakdown of the cost must be provided.

C3.1: EMPLOYER'S SERVICE INFORMATION

Contents

When the document is complete, insert a 'Table of Contents'. To do this go to: Insert, → Reference, → Index and tables → Table of Contents. Three levels and the title (but not the subtitle) may be shown if the formats used in this template are retained.

Otherwise insert list of contents manually.

1 Description of the *service*

1.1 Executive overview

General Overhauls (Durations 43 MGO's/IR's and GO's 50 days)

Burner repairs during Outages consist of the following:

Burners Repairs Contract or will do all cutting, grinding and welding repairs on burners according to the approved recommendations and procedures.(240-106628253 Standard for Welding Requirements on Eskom Plant.), (Burner Manufacturing Standard 240-106027729)

- Standard risk assessment will be handed over to the successful contractor on starting with each outage project doing burner repairs. This risk assessment will inform the contractor of all risks associated with burner repairs

High-level scope

- GO'S and MGO's - Remove all 24 burners complete, perform repairs, and install burners.
- IR - Remove 12 burners complete, perform repairs, and install burners.
- IN - Remove 2 burners complete, perform repairs, and install burners.
- Manufacture 12 spare burners for maintenance and or decrease for outage repairs. These burners will become rotable during outages for installation and repairs done during if critical work is complete or after outage.
- 50% of burners has a platform, which hand railings and fire hydrant pipes need to be removed for access and installed afterwards.

Assembled view of burner with components

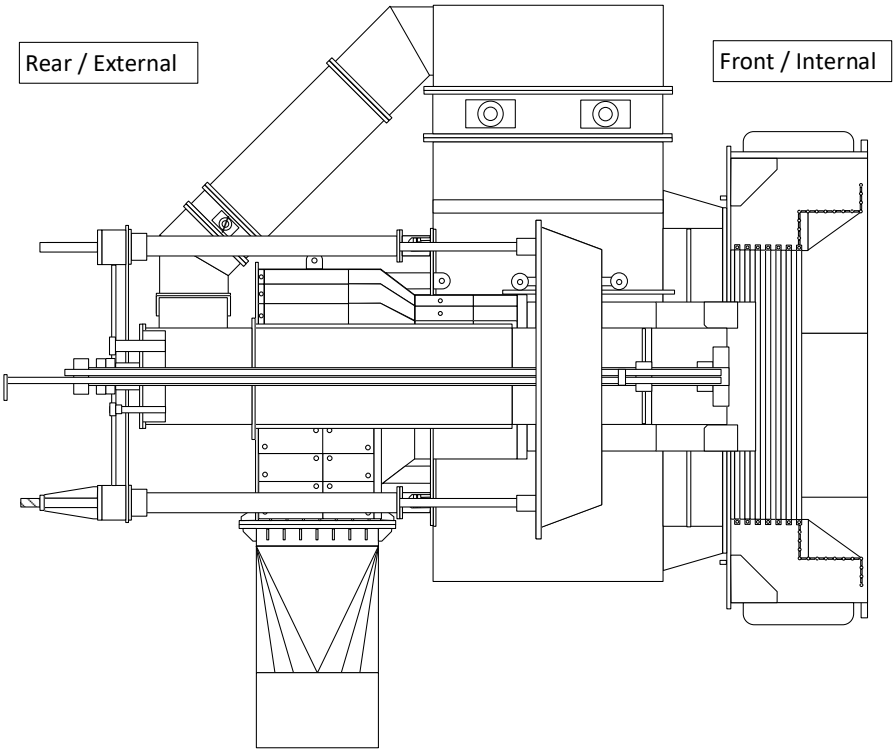

Components breakdown list per burner

Original list	Acronym	Component description	Item number per component
1	SAID	Secondary air inlet ducting	20
2	SAD	Secondary air damper	27
3	SAWB	Secondary air windbox	36
4	SAC	Secondary Air Cone	7
5	TNBC	Tube nest burner casing	14
6	BS	Burner supports	5
7	SASE	Secondary air swirler external	12
8	SASI	Secondary air swirler Internal	11
9	PFI	PF inlet	14
10	PFB	Pulverised Fuel Burner	44
11	PFL	Pulverised Fuel Liners	16
12	CADI	Core air Ducting insert	13
13	CAD	Core air damper	19
14	CADB	Core air ducting bend	18
15	CA	Core air	16
16	FSMF	Fuel oil Scroll Mounting Flange	15
17	FOS	Fuel oil Scroll	9
18	CT	Carier tube	4
19	TNT	Tube nest tubes	4

Items break down list per component

1 – SAID
Secondary Air Inlet Ducting
Component number: 1
Part count: 20

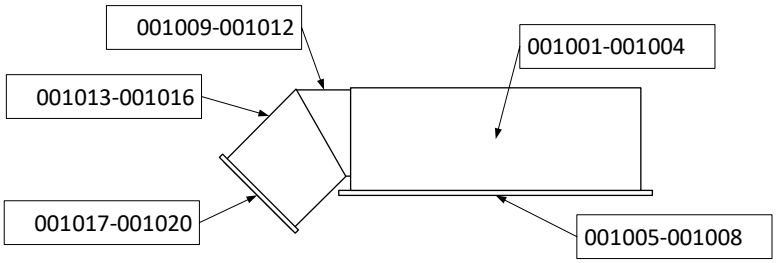

Code	Component	Item	Material	Shape	Shape code	QTY per burner
001001	SAID	SAID Ducting - Left	16Mo3	Plate - rectangular	S-001001	1
001002	SAID	SAID Ducting - Right	16Mo3	Plate - rectangular	S-001002	1
001003	SAID	SAID Ducting - Front	16Mo3	Plate - rectangular	S-001003	1
001004	SAID	SAID Ducting - Rear	16Mo3	Plate - rectangular	S-001004	1
001005	SAID	SAID Outlet flange - Left	S355JR	Angle iron	S-002001	1
001006	SAID	SAID Outlet flange - Right	S355JR	Angle iron	S-002002	1
001007	SAID	SAID Outlet flange - Front	S355JR	Angle iron	S-002003	1
001008	SAID	SAID Outlet flange - Rear	S355JR	Angle iron	S-002004	1
001009	SAID	SAID Core air tap off - Top - horizontal	16Mo3	Plate - rectangular	S-001005	1
001010	SAID	SAID Core air tap off - Bottom - horizontal	16Mo3	Plate - rectangular	S-001006	1
001011	SAID	SAID Core air tap off - Left - horizontal	16Mo3	Plate - square trapezium	S-003001	1
001012	SAID	SAID Core air tap off - right - horizontal	16Mo3	Plate - square trapezium	S-003002	1
001013	SAID	SAID Core air tap off - Rear - angled	16Mo3	Plate - rectangular	S-001007	1
001014	SAID	SAID Core air tap off - Front - angled	16Mo3	Plate - rectangular	S-001008	1

Code	Component	Item	Material	Shape	Shape code	QTY per burner
001015	SAID	SAID Core air tap off - Left - angled	16Mo3	Plate - square trapezium	S-003003	1
001016	SAID	SAID Core air tap off - right - angled	16Mo3	Plate - square trapezium	S-003004	1
001017	SAID	SAID Core air tap off outlet flange - Left	S355JR	Angle iron	S-002005	1
001018	SAID	SAID Core air tap off outlet flange - Right	S355JR	Angle iron	S-002006	1
001019	SAID	SAID Core air tap off outlet flange - Front	S355JR	Angle iron	S-002007	1
001020	SAID	SAID Core air tap off outlet flange - Rear	S355JR	Angle iron	S-002008	1

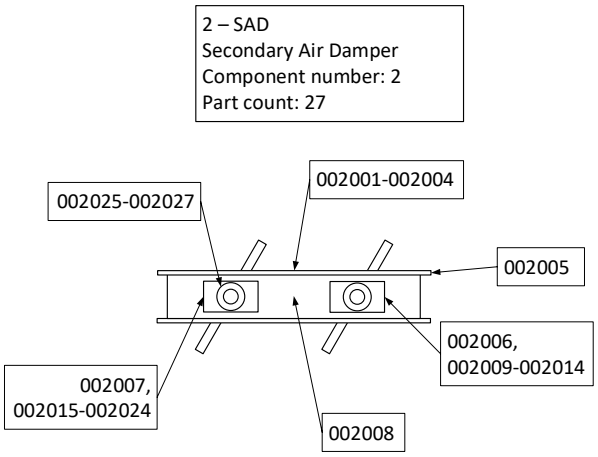

Code	Component	Item	Material	Shape	Shape code	QTY per burner
002001	SAD	SAD Casing (Front)	S355JR	C-channel	S-004001	1
002002	SAD	SAD Casing (Left)	S355JR	C-channel	S-004002	1
002003	SAD	SAD Casing (Rear)	S355JR	C-channel	S-004003	1
002004	SAD	SAD Casing (Right)	S355JR	C-channel	S-004004	1
002005	SAD	SAD Casing - fasteners	Gr 8.8	Fastener set	S-005001	54
002006	SAD	SAD Front Vane	S355JR	Plate - rectangular	S-001009	1
002007	SAD	SAD Rear Vane	S355JR	Plate - rectangular	S-001010	1

Code	Component	Item	Material	Shape	Shape code	QTY per burner
002008	SAD	SAD front-rear dividing plate	S355JR	Plate - rectangular	S-001011	1
002009	SAD	SAD Front Left Bearing	Various	Mechanical component	S-006001	1
002010	SAD	SAD Front Left Shaft	S355JR	Rod	S-007001	1
002011	SAD	SAD Front Left Seal	S355JR	Flat bar	S-008001	1
002012	SAD	SAD Front Right Bearing	Various	Mechanical component	S-006002	1
002013	SAD	SAD Front Right Shaft	S355JR	Rod	S-007002	1
002014	SAD	SAD Front Right Seal	S355JR	Flat bar	S-008002	1
002015	SAD	SAD Rear Left Bearing	Various	Mechanical component	S-006003	1
002016	SAD	SAD Rear Left Shaft	S355JR	Rod	S-007003	1
002017	SAD	SAD Rear Left Seal	S355JR	Flat bar	S-008003	1
002018	SAD	SAD Rear Right Bearing	Various	Mechanical component	S-006004	1
002019	SAD	SAD Rear Right Shaft	S355JR	Rod	S-007004	1
002020	SAD	SAD Rear Right Seal	S355JR	Flat bar	S-008004	1
002021	SAD	SAD Front Front seal	S355JR	Flat bar	S-008005	1
002022	SAD	SAD Front Rear Seal	S355JR	Flat bar	S-008006	1
002023	SAD	SAD Rear Front Seal	S355JR	Flat bar	S-008007	1
002024	SAD	SAD Rear Rear Seal	S355JR	Flat bar	S-008008	1
002025	SAD	SAD Rear damper linking arm	Various	Mechanical component	S-006005	1
002026	SAD	SAD Front damper linking arm	Various	Mechanical component	S-006006	1
002027	SAD	SAD Front damper actuator arm	Various	Mechanical component	S-006007	1

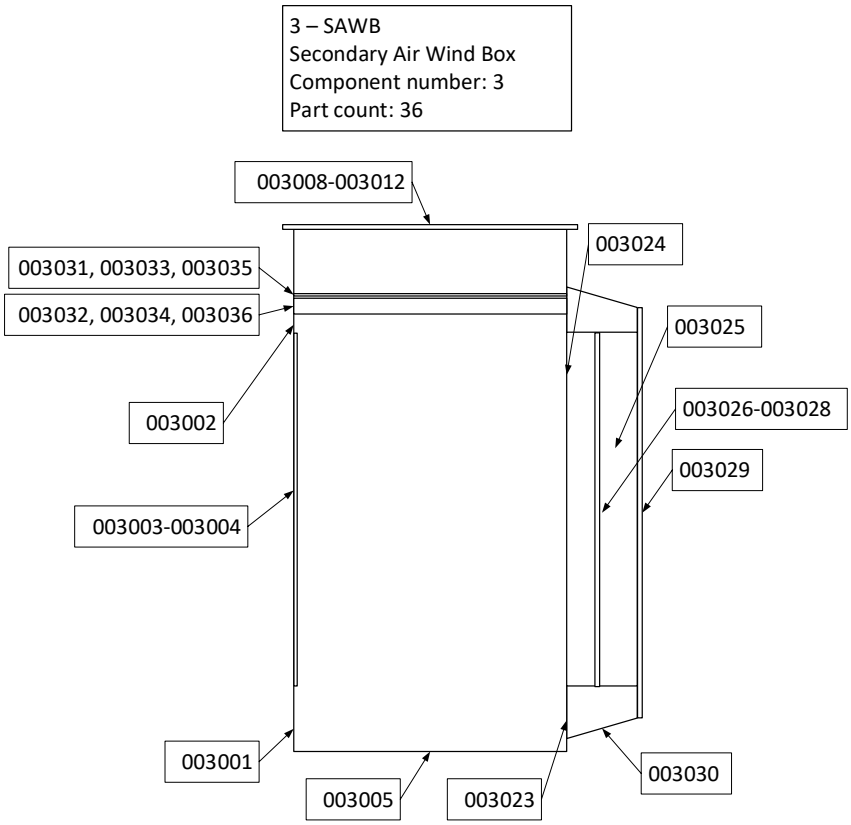

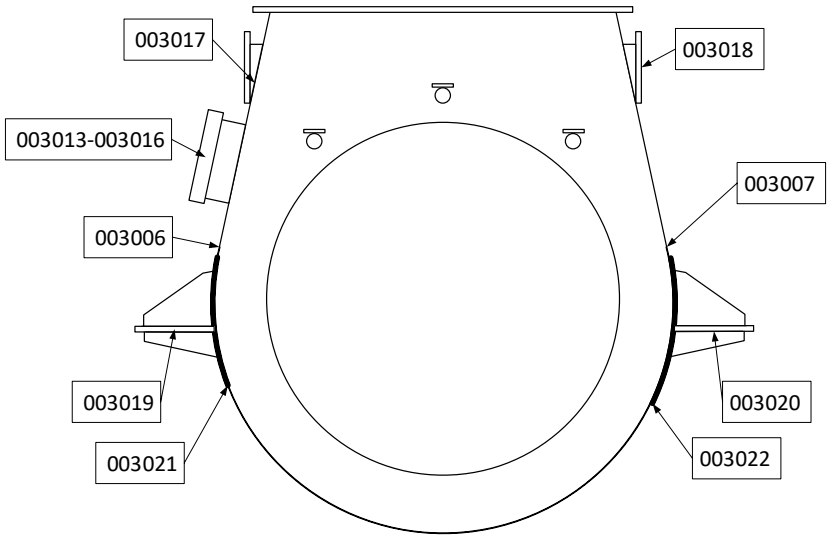

Code	Component	Item	Material	Shape	Shape code	QTY per burner
003001	SAWB	SAWB Rear bottom circular flange	16Mo3	Plate - Circular	S-009001	1
003002	SAWB	SAWB Rear top trapezium flange	16Mo3	Plate - Trap with hole cut	S-010001	1
003003	SAWB	SAWB Rear plate studs	Gr 8.8	Stud	S-011001	36

Code	Component	Item	Material	Shape	Shape code	QTY per burner
003004	SAWB	SAWB Rear plate Fasteners	Gr 8.8	Fastener set	S-005002	36
003005	SAWB	SAWB Bottom Circular	16Mo3	Plate - Rolled	S-012001	1
003006	SAWB	SAWB Side tapers (Left)	16Mo3	Plate - rectangular	S-001012	1
003007	SAWB	SAWB Side tapers (Right)	16Mo3	Plate - rectangular	S-001013	1
003008	SAWB	SAWB Damper flange (Front)	S355JR	Angle iron	S-002009	1
003009	SAWB	SAWB Damper flange (Left)	S355JR	Angle iron	S-002010	1
003010	SAWB	SAWB Damper flange (Rear)	S355JR	Angle iron	S-002011	1
003011	SAWB	SAWB Damper flange (Right)	S355JR	Angle iron	S-002012	1
003012	SAWB	SAWB Damper flange - fasteners	Gr 8.8	Fastener set	S-005003	54
003013	SAWB	SAWB inspection hatch side walls	16Mo3	Plate - Rolled	S-012002	1
003014	SAWB	SAWB inspection hatch door	16Mo3	Assembly - fabricated	S-013001	1
003015	SAWB	SAWB inspection hatch door hinges	S355JR	Mechanical component	S-006008	2
003016	SAWB	SAWB inspection hatch door locking mechanism	S355JR	Mechanical component	S-006009	1
003017	SAWB	SAWB lifting lug - Left	S355JR	Assembly - fabricated	S-013002	1
003018	SAWB	SAWB lifting lug - Right	S355JR	Assembly - fabricated	S-013003	1
003019	SAWB	SAWB attachment lug for fixed support - Left	S355JR	Assembly - fabricated	S-013004	1
003020	SAWB	SAWB attachment lug for fixed support - Right	S355JR	Assembly - fabricated	S-013005	1
003021	SAWB	SAWB attachment lug for fixed support Saddle - Left	S355JR	Plate - Rolled	S-012003	1
003022	SAWB	SAWB attachment lug for fixed support Saddle - Right	S355JR	Plate - Rolled	S-012004	1
003023	SAWB	SAWB Front bottom circular casing	16Mo3	Plate - Circular	S-009002	1
003024	SAWB	SAWB Front top trapezium casing	16Mo3	Plate - Trap with hole cut	S-010002	1

Code	Component	Item	Material	Shape	Shape code	QTY per burner
003025	SAWB	SAWB Front distance piece tube	16Mo3	Plate - Rolled	S-012005	1
003026	SAWB	SAWB Cone mounting flange	S355JR	Angle iron rolled	S-014001	1
003027	SAWB	SAWB Cone mounting studs	Gr 8.8	Stud	S-011002	36
003028	SAWB	SAWB Cone mounting fasteners	Gr 8.8	Fastener set	S-005004	36
003029	SAWB	SAWB Mounting flange to tube nest casing	S355JR	Angle iron rolled	S-014002	1
003030	SAWB	SAWB Mounting flange external gussets	S355JR	Plate - gusset	S-015001	8
003031	SAWB	SAWB Inlet Internal stiffener Left	S355JR	Pipe	S-016001	1
003032	SAWB	SAWB Inlet Internal stiffener Left Protection plate	VRN 400	Plate - rectangular	S-001014	1
003033	SAWB	SAWB Inlet Internal stiffener Centre	S355JR	Pipe	S-016002	1
003034	SAWB	SAWB Inlet Internal stiffener Centre Protection plate	VRN 400	Plate - rectangular	S-001015	1
003035	SAWB	SAWB Inlet Internal stiffener Right	S355JR	Pipe	S-016003	1
003036	SAWB	SAWB Inlet Internal stiffener Right Protection plate	VRN 400	Plate - rectangular	S-001016	1

4 – SAC
Secondary Air Cone
Component number: 4
Part count: 7

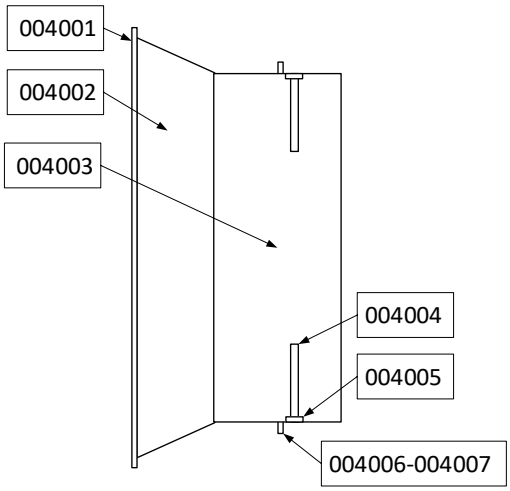

Code	Component	Item	Material	Shape	Shape code	QTY per burner
004001	SAC	SAC Inlet flange	S355JR	Plate - circular	S-009003	1
004002	SAC	SAC Cone	S355JR	Plate - cone	S-017001	1
004003	SAC	SAC Tube	S355JR	Plate - Rolled	S-012006	1
004004	SAC	SAC centralising pins	S355JR	Rod	S-007005	6
004005	SAC	SAC centralising pins saddles	S355JR	Plate - Rolled	S-012007	6
004006	SAC	SAC Mounting flange	S355JR	Angle iron rolled	S-014003	1
004007	SAC	SAC mounting flange refractory	Refractory	Refractory	S-018001	1

5 – TNBC
Tube Nest Burner Casing
Component number: 5
Part count: 14

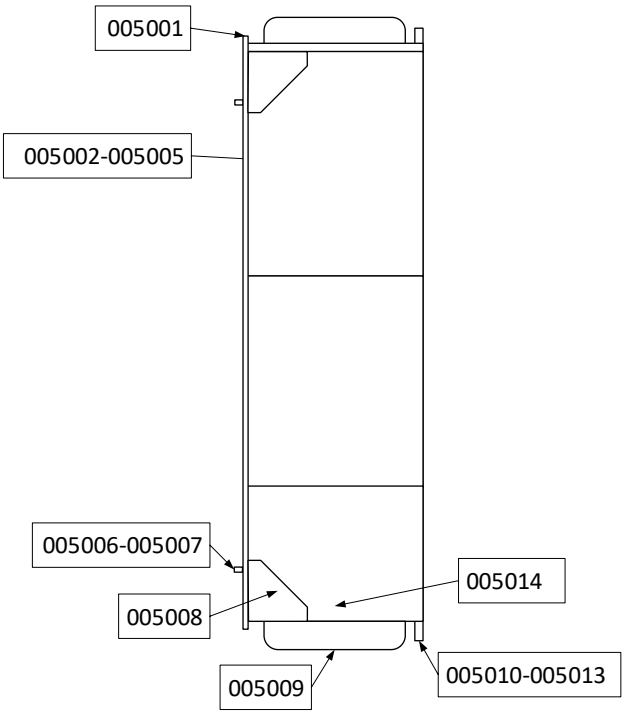

Code	Component	Item	Material	Shape	Shape code	QTY per burner
005001	TNBC	TNBC Rear Octagon flange	16Mo3	Plate - rectangular	S-001017	1
005002	TNBC	TNBC Rear Octagon side - Small	16Mo4	Plate - rectangular	S-001018	2
005003	TNBC	TNBC Rear Octagon side - Medium	16Mo5	Plate - rectangular	S-001019	2
005004	TNBC	TNBC Rear Octagon side - Large	16Mo6	Plate - rectangular	S-001020	2
005005	TNBC	TNBC Rear Octagon side - X-Large	16Mo7	Plate - rectangular	S-001021	2
005006	TNBC	TNBC Rear flange studs for SAWB	Gr 8.8	Stud	S-011003	2
005007	TNBC	TNBC Rear flange fasteners for SAWB	Gr 8.8	Fastener set	S-005005	2
005008	TNBC	TNBC Octagon Internal Gusset	S355JR	Plate - gusset	S-015002	12
005009	TNBC	TNBC Octagon external stiffeners	S355JR	Plate - rectangular	S-001022	8

Code	Component	Item	Material	Shape	Shape code	QTY per burner
005010	TNBC	TNBC Octagon angle iron for mounting to tube wall - small	S355JR	Angle iron	S-002013	2
005011	TNBC	TNBC Octagon angle iron for mounting to tube wall - Medium	S355JR	Angle iron	S-002014	2
005012	TNBC	TNBC Octagon angle iron for mounting to tube wall - Large	S355JR	Angle iron	S-002015	2
005013	TNBC	TNBC Octagon angle iron for mounting to tube wall - X-large	S355JR	Angle iron	S-002016	2
005014	TNBC	TNB internal, tube external refractory	Refractory	Refractory	S-018002	1

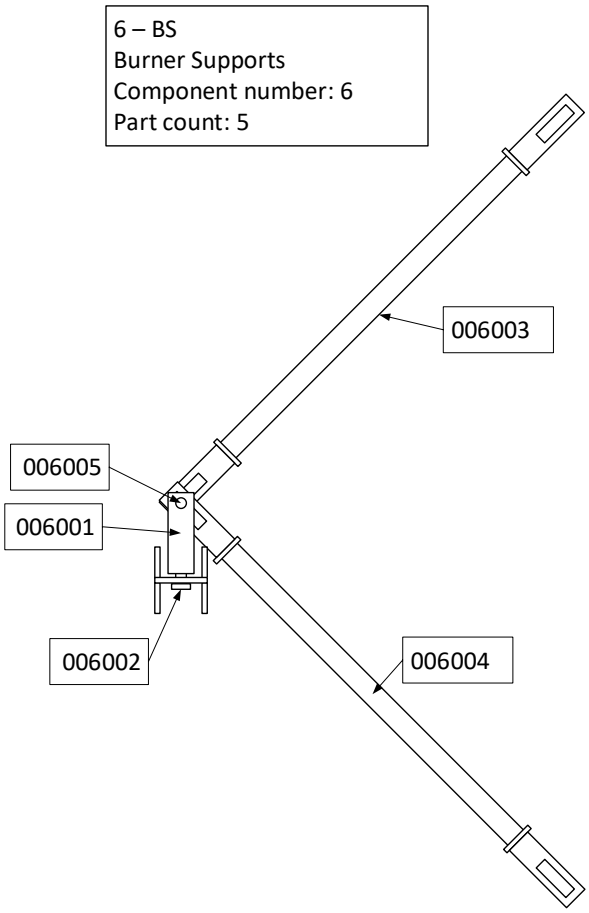

Code	Component	Item	Material	Shape	Shape code	QTY per burner
006001	BS	BS Swivel	S355JR	Plate - rectangular	S-001023	2
006002	BS	BS fasteners	Gr 8.8	Fastener set	S-005006	2
006003	BS	BS Long pipe assembly	S355JR	Assembly - fabricated	S-013006	2
006004	BS	BS Short pipe assembly	S355JR	Assembly - fabricated	S-013007	2
006005	BS	BS Swivel connecting pin with split pins	S355JR	Fastener set	S-005007	2

7 – SASE
Secondary Air Swirler External
Component number: 7
Part count: 12

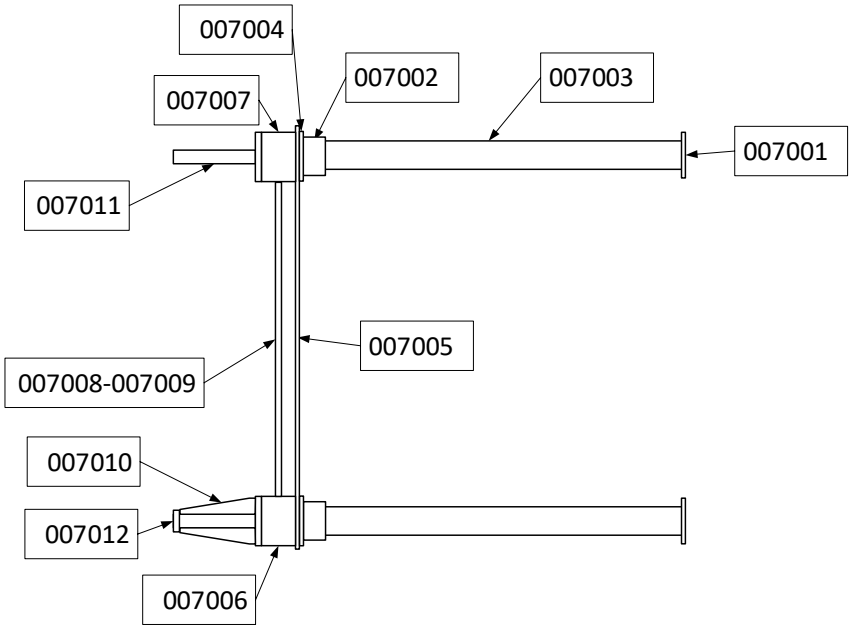

Code	Component	Item	Material	Shape	Shape code	QTY per burner
007001	SASE	SASE flange distance piece front flange	S355JR	Plate - Circular	S-009004	3
007002	SASE	SASE flange distance piece rear reinforcement tube	S355JR	Machined component	S-019001	3
007003	SASE	SASE flange distance piece pipe	S355JR	Pipe	S-016004	3
007004	SASE	SASE flange distance piece rear flange	S355JR	Plate - circular	S-009005	3
007005	SASE	SASE external large flange	S355JR	Plate - circular	S-009006	1
007006	SASE	SASE Main gearbox	Various	Mechanical component	S-006010	1
007007	SASE	SASE Secondary gearbox	Various	Mechanical component	S-006011	2
007008	SASE	SASE Secondary gearbox links	S355JR	Rod	S-007006	2
007009	SASE	SASE Secondary gearbox - universal joint (1.25x3.75 inch)	S355JR	Mechanical component	S-006012	4
007010	SASE	SASE Position sleeve with flange, rib and lock nut	S355JR	Assembly - fabricated	S-013008	1

Code	Component	Item	Material	Shape	Shape code	QTY per burner
007011	SASE	SASE Secondary gearbox extending rod covers	S355JR	Assembly - fabricated	S-013009	2
007012	SASE	SASI adjusting ratchet	S355JR	Plate - Circular	S-009007	1

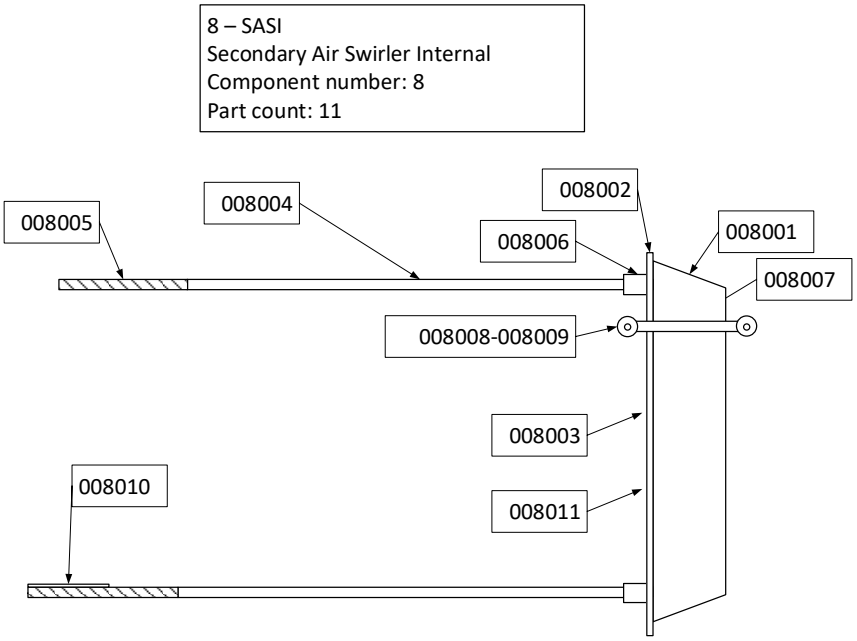

Code	Component	Item	Material	Shape	Shape code	QTY per burner
008001	SASI	SASI cone	S355JR	Plate - cone	S-017002	1
008002	SASI	SASI cone flange	S355JR	Plate - Circular	S-009008	1
008003	SASI	SASI inner ring	S355JR	Rod	S-007007	1
008004	SASI	SASI Adjusting rod - unthreaded	S355JR	Rod	S-007008	3
008005	SASI	SASI Adjusting rod - threaded	S355JR	Rod	S-007009	3
008006	SASI	SASI Adjusting rod - universal joint (2x5.44 inch)	S355JR	Mechanical component	S-006013	3
008007	SASI	SASI sliding wheels link	S355JR	Flat bar	S-008009	1
008008	SASI	SASI wheels	S355JR	Plate - Circular	S-009009	4
008009	SASI	SASI wheels fasteners	Gr 8.8	Fastener set	S-005008	2

Code	Component	Item	Material	Shape	Shape code	QTY per burner
008010	SASI	SASI Position indicator	SS310	Flat bar	S-008010	1
008011	SASI	SASI Vane	S355JR	Plate - vane	S-020001	16

9 – PFI
PF Inlet
Component number: 9
Part count: 14

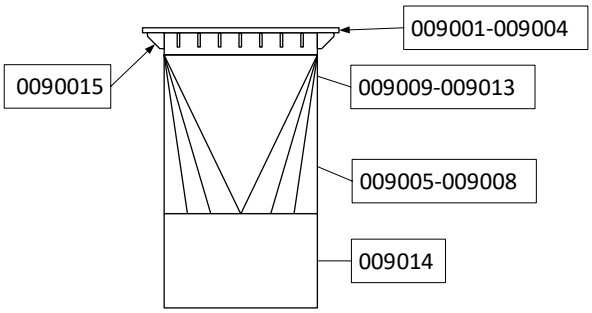

Code	Component	Item	Material	Shape	Shape code	QTY per burner
009001	PFI	PFI Outlet flange - Left	S355JR	Plate - rectangular	S-001024	1
009002	PFI	PFI Outlet flange - Right	S355JR	Plate - rectangular	S-001025	1
009003	PFI	PFI Outlet flange - Front	S355JR	Plate - rectangular	S-001026	1
009004	PFI	PFI Outlet flange - Rear	S355JR	Plate - rectangular	S-001027	1
009005	PFI	PFI Outlet flange - Gusset	S355JR	Plate - gusset	S-015003	20
009006	PFI	PFI inlet round to square - Left front corner	S355JR	Plate - Square to round forming	S-021001	1
009007	PFI	PFI inlet round to square - Right front corner	S355JR	Plate - Square to round forming	S-021002	1
009008	PFI	PFI inlet round to square - Left rear corner	S355JR	Plate - Square to round forming	S-021003	1
009009	PFI	PFI inlet round to square - Right rear corner	S355JR	Plate - Square to	S-021004	1

Code	Component	Item	Material	Shape	Shape code	QTY per burner
				round forming		
009010	PFI	PFI inlet round to square - Left straight insert	S355JR	Plate - rectangular	S-001028	1
009011	PFI	PFI inlet round to square - Right straight insert	S355JR	Plate - rectangular	S-001029	1
009012	PFI	PFI inlet round to square - Front straight insert	S355JR	Plate - rectangular	S-001030	1
009013	PFI	PFI inlet round to square - Rear straight insert	S355JR	Plate - rectangular	S-001031	1
009014	PFI	PFI pipe up to cut off plate	S355JR	Plate - Rolled	S-012008	1

10 – PFB
Pulverised Fuel Burner
Component number: 10
Part count: 44

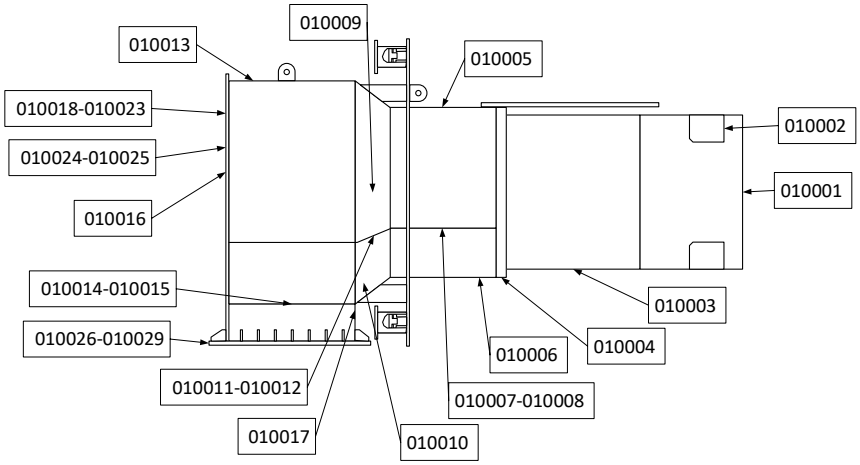

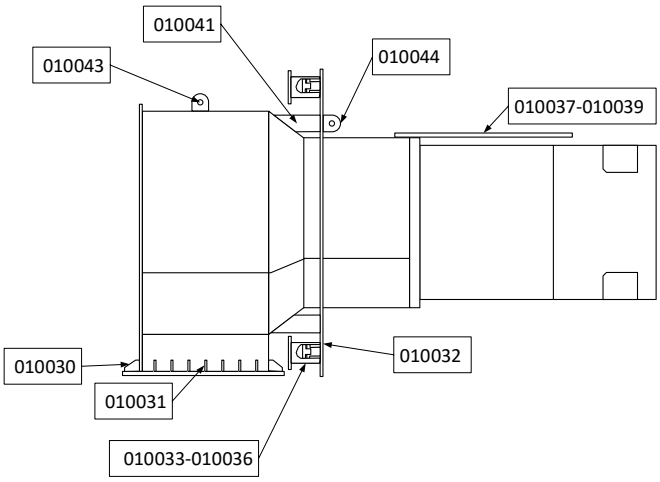

Code	Component	Item	Material	Shape	Shape code	QTY per burner
010001	PFB	PF Burner Tip	SS310	Plate - Rolled	S-012009	1
010002	PFB	PF Burner centralising plate for core air	SS310	Plate - gusset	S-015004	6
010003	PFB	PF burner tube	16Mo3	Plate - Rolled	S-012010	1
010004	PFB	PF burner ring	16Mo3	Mechanical component	S-006014	1
010005	PFB	PF burner tube Liner back casing	16Mo3	Plate - Rolled	S-012011	1
010006	PFB	PF burner tube Liner bottom casing	16Mo3	Plate - Rolled	S-012012	1

Code	Component	Item	Material	Shape	Shape code	QTY per burner
010007	PFB	PF burner tube liner transition - Left	16Mo3	Plate - rectangular	S-001032	1
010008	PFB	PF burner tube liner transition - Right	16Mo3	Plate - rectangular	S-001033	1
010009	PFB	PF burner top liner backing cone	16Mo3	Plate - cone	S-017003	1
010010	PFB	PF burner bottom cone	16Mo3	Plate - cone	S-017004	1
010011	PFB	PF burner cone liner transition - Left	16Mo3	Plate - rectangular	S-001034	1
010012	PFB	PF burner cone liner transition - Right	16Mo3	Plate - rectangular	S-001035	1
010013	PFB	PF burner inlet liner backing tube	16Mo3	Plate - Rolled	S-012013	1
010014	PFB	PF burner inlet - Left	16Mo3	Plate - rectangular	S-001036	1
010015	PFB	PF burner inlet - Right	16Mo3	Plate - rectangular	S-001037	1
010016	PFB	PF Burner inlet - Rear	16Mo3	Plate - Trap with hole cut	S-010003	1
010017	PFB	PF burner inlet - Front	16Mo3	Plate - Trap with hole cut	S-010004	1
010018	PFB	PF Burner Core air studs	Gr 8.8	Stud	S-011004	12
010019	PFB	PF burner Left C-Door studs	Gr 8.8	Stud	S-011005	9
010020	PFB	PF burner Right C-Door studs	Gr 8.8	Stud	S-011006	9
010021	PFB	PF Burner Core air Fasteners	Gr 8.8	Fastener set	S-005009	12
010022	PFB	PF burner Left C-Door Fasteners	Gr 8.8	Fastener set	S-005010	9
010023	PFB	PF burner Right C-Door Fasteners	Gr 8.8	Fastener set	S-005011	9
010024	PFB	PF Burner C-Door (Outer)	16Mo3	Plate - Circular	S-009010	2
010025	PFB	PF Burner C-Door (Inner)	16Mo3	Plate - Circular	S-009011	2
010026	PFB	PF Burner inlet flange - Front	16Mo3	Plate - rectangular	S-001038	1
010027	PFB	PF Burner inlet flange - Rear	16Mo3	Plate - rectangular	S-001039	1

Code	Component	Item	Material	Shape	Shape code	QTY per burner
010028	PFB	PF Burner inlet flange - Left	16Mo3	Plate - rectangular	S-001040	1
010029	PFB	PF Burner inlet flange - Right	16Mo3	Plate - rectangular	S-001041	1
010030	PFB	PF Burner inlet flange gusset - large	16Mo3	Plate - gusset	S-015005	16
010031	PFB	PF Burner inlet flange gusset - small	16Mo3	Plate - gusset	S-015006	14
010032	PFB	PF Burner mounting flange	16Mo3	Plate - Circular	S-009012	1
010033	PFB	PF Burner swirler gland cover pipe	16Mo3	Pipe	S-016005	3
010034	PFB	PF Burner swirler gland cover Flange	S355JR	Plate - Circular	S-009013	3
010035	PFB	PF Burner swirler gland - female	16Mo3	Machined component	S-019002	3
010036	PFB	PF Burner swirler gland - male	16Mo3	Machined component	S-019003	3
010037	PFB	PF Burner swirler wheels rail base	S355JR	Flat bar	S-008011	1
010038	PFB	PF Burner swirler wheels rail support	S355JR	Flat bar	S-008012	1
010039	PFB	PF Burner swirler wheels rail rod	S355JR	Rod	S-007010	1
010040	PFB	PF Burner Left Lifting beam	S355JR	Assembly - fabricated	S-013010	1
010041	PFB	PF Burner Cone external gusset to mounting flange	S355JR	Plate - gusset	S-015007	6
010042	PFB	PF Burner Right Lifting beam	S355JR	Assembly - fabricated	S-013011	1
010043	PFB	PF Burner Top front external lifting lug	S355JR	Plate - rectangular	S-001042	1
010044	PFB	PF Burner Top mounting flange internal lifting lug	S355JR	Plate - rectangular	S-001043	1

11 – PFL
Pulverised Fuel Liners
Component number: 11
Part count: 16

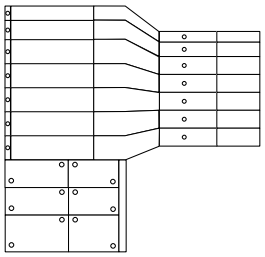

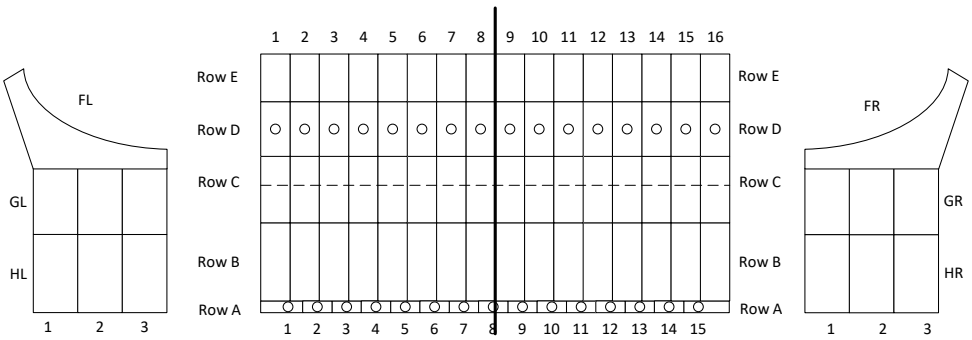

Code	Component	Item	Material	Shape	Shape code	QTY per burner
011001	PFL	PF liners Row A	VRN 400	Liner - circular	S-022001	15
011002	PFL	PF liners Row A - Fastener set	Gr 8.8	Fastener set	S-005012	15
011003	PFL	PF liners Row A - Suite/sweet/filler cap	VRN 400	Liner - circular	S-022002	15
011004	PFL	PF liners Row B	VRN 400	Liner - circular	S-022003	16
011005	PFL	PF liners Row C	VRN 400	Liner - circular	S-022004	16
011006	PFL	PF liners Row D	VRN 400	Liner - circular	S-022005	16
011007	PFL	PF liners Row D - Fastener	Gr 8.8	Fastener set	S-005013	16
011008	PFL	PF liners Row D - Suite/sweet/filler cap	VRN 400	Liner - circular	S-022006	16
011009	PFL	PF liners Row E	VRN 400	Liner - circular	S-022007	16
011010	PFL	PF liner Row FL	VRN 400	Liner - square	S-023001	1

Code	Component	Item	Material	Shape	Shape code	QTY per burner
011011	PFL	PF liner Row FR	VRN 400	Liner - square	S-023002	1
011012	PFL	PF liner Row GL	VRN 400	Liner - square	S-023003	3
011013	PFL	PF liner Row GR	VRN 400	Liner - square	S-023004	3
011014	PFL	PF liner Row HL	VRN 400	Liner - square	S-023005	3
011015	PFL	PF liner Row HR	VRN 400	Liner - square	S-023006	3
011016	PFL	PF liners Inlet - Bolts	Gr 8.8	Fastener set	S-005014	36

12 – CADI
Core Air Ducting Insert
Component number: 12
Part count: 13

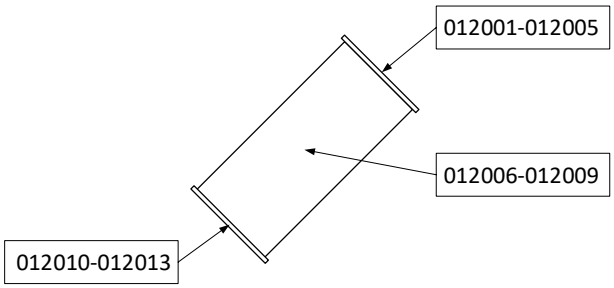

Code	Component	Item	Material	Shape	Shape code	QTY per burner
012001	CADI	CADI Inlet flange - Left	S355JR	Angle iron	S-002017	1
012002	CADI	CADI Inlet flange - Right	S355JR	Angle iron	S-002018	1
012003	CADI	CADI Inlet flange - Front	S355JR	Angle iron	S-002019	1
012004	CADI	CADI Inlet flange - Rear	S355JR	Angle iron	S-002020	1
012005	CADI	CADI Inlet flange - Fasteners	Gr 8.8	Fastener set	S-005015	28
012006	CADI	CADI Ducting - Left	16Mo3	Plate - rectangular	S-001044	1
012007	CADI	CADI Ducting - Right	16Mo3	Plate - rectangular	S-001045	1

012008	CADI	CADI Ducting - Front	16Mo3	Plate - rectangular	S-001046	1
012009	CADI	CADI Ducting - Rear	16Mo3	Plate - rectangular	S-001047	1
012010	CADI	CADI Outlet flange - Left	S355JR	Angle iron	S-002021	1
012011	CADI	CADI Outlet flange - Right	S355JR	Angle iron	S-002022	1
012012	CADI	CADI Outlet flange - Front	S355JR	Angle iron	S-002023	1
012013	CADI	CADI Outlet flange - Rear	S355JR	Angle iron	S-002024	1

13 – CAD
Core Air Damper
Component number: 13
Part count: 19

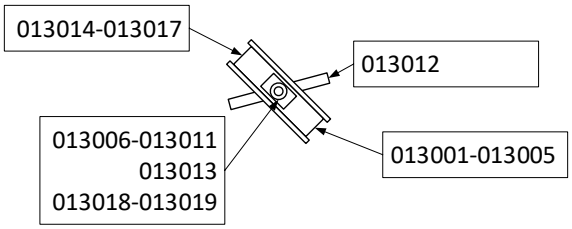

Code	Component	Item	Material	Shape	Shape code	QTY per burner
013001	CAD	CAD Casing - Left	16Mo3	C-Channel	S-004005	1
013002	CAD	CAD Casing - Right	16Mo3	C-Channel	S-004006	1
013003	CAD	CAD Casing - Front	16Mo3	C-Channel	S-004007	1
013004	CAD	CAD Casing - Rear	16Mo3	C-Channel	S-004008	1
013005	CAD	CAD Casing - Fasteners	Gr 8.8	Fastener set	S-005016	28
013006	CAD	CAD DE Bearing	Various	Mechanical component	S-006015	1
013007	CAD	CAD DE Bearing Mounting bracket	S355JR	C-Channel	S-004009	1
013008	CAD	CAD Gland follower Female	S355JR	Machined component	S-019004	1

Code	Component	Item	Material	Shape	Shape code	QTY per burner
013009	CAD	CAD Gland follower - Male (DE - holed)	S355JR	Machined component	S-019005	1
013010	CAD	CAD Gland follower - Male (NDE - blind	S355JR	Machined component	S-019006	1
013011	CAD	CAD Gland follower packing	Packing	Mechanical component	S-006016	1
013012	CAD	CAD Vane	S355JR	Plate - rectangular	S-001048	2
013013	CAD	CAD Vane Sleeve	S355JR	Pipe	S-016006	1
013014	CAD	CAD Seal - Left	S355JR	Flat bar	S-008013	1
013015	CAD	CAD Seal - Right	S355JR	Flat bar	S-008014	2
013016	CAD	CAD Seal - Front	S355JR	Flat bar	S-008015	3
013017	CAD	CAD Seal - Rear	S355JR	Flat bar	S-008016	4
013018	CAD	CAD Shaft	S355JR	Rod	S-007011	1
013019	CAD	CAD DE Arm	Various	Mechanical component	S-006017	1

14 – CADB
Core Air Ducting Bend
Component number: 14
Part count: 18

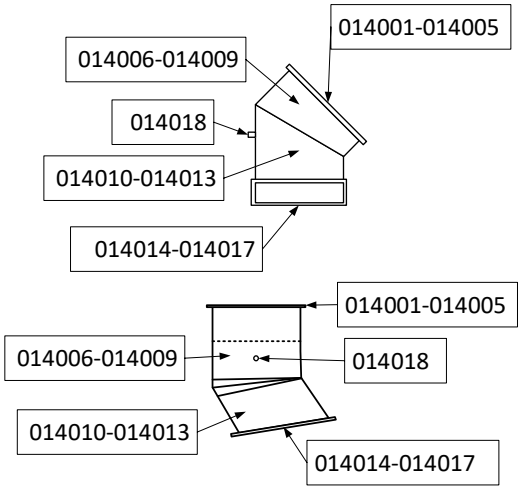

Code	Component	Item	Material	Shape	Shape code	QTY per burner
014001	CADB	CADB Inlet flange - Left	S355JR	Angle iron	S-002025	1
014002	CADB	CADB Inlet flange - Right	S355JR	Angle iron	S-002026	1
014003	CADB	CADB Inlet flange - Front	S355JR	Angle iron	S-002027	1
014004	CADB	CADB Inlet flange - Rear	S355JR	Angle iron	S-002028	1
014005	CADB	CADB Inlet flange - Fasteners	Gr 8.8	Fastener set	S-005017	28
014006	CADB	CADB Ducting above bend - Left	16Mo3	Plate - square trapezium	S-003005	1
014007	CADB	CADB Ducting above bend - Right	16Mo3	Plate - square trapezium	S-003006	1
014008	CADB	CADB Ducting above bend - Front	16Mo3	Plate - square trapezium	S-003007	1
014009	CADB	CADB Ducting above bend - Rear	16Mo3	Plate - square trapezium	S-003008	1
014010	CADB	CADB Ducting below bend - Left	16Mo3	Plate - square trapezium	S-003009	1
014011	CADB	CADB Ducting below bend - Right	16Mo3	Plate - square trapezium	S-003010	1
014012	CADB	CADB Ducting below bend - Front	16Mo3	Plate - square trapezium	S-003011	1

Code	Component	Item	Material	Shape	Shape code	QTY per burner
014013	CADB	CADB Ducting below bend - Rear	16Mo3	Plate - square trapezium	S-003012	1
014014	CADB	CADB Outlet flange - Left	S355JR	Angle iron	S-002029	1
014015	CADB	CADB Outlet flange - Right	S355JR	Angle iron	S-002030	1
014016	CADB	CADB Outlet flange - Front	S355JR	Angle iron	S-002031	1
014017	CADB	CADB Outlet flange - Rear	S355JR	Angle iron	S-002032	1
014018	CADB	CADB calibration tap off socket - 3/4 inch	16Mo3	Mechanical component	S-006018	1

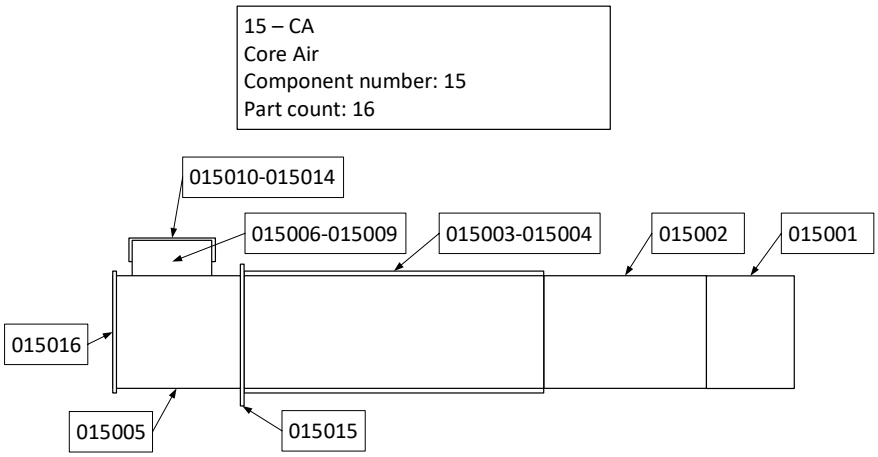

Code	Component	Item	Material	Shape	Shape code	QTY per burner
015001	CA	Core air tip	SS310	Plate - Rolled	S-012014	1
015002	CA	Core air tube	16Mo3	Plate - Rolled	S-012015	1
015003	CA	Core air sleeved internal	16Mo3	Plate - Rolled	S-012016	1
015004	CA	Core air sleeve	16Mo3	Plate - Rolled	S-012017	1
015005	CA	Core air external	16Mo3	Plate - Rolled	S-012018	1
015006	CA	Core air inlet - Front	16Mo3	Plate - Trap with hole cut	S-010005	1
015007	CA	Core air inlet - Rear	16Mo3	Plate - Trap with hole cut	S-010006	1

Code	Component	Item	Material	Shape	Shape code	QTY per burner
015008	CA	Core air inlet - Left	16Mo3	Plate - rectangular	S-001049	1
015009	CA	Core air inlet - Right	16Mo3	Plate - rectangular	S-001050	1
015010	CA	Core air inlet air flange - Left	16Mo3	Angle iron	S-002033	1
015011	CA	Core air inlet air flange - Right	16Mo3	Angle iron	S-002034	1
015012	CA	Core air inlet air flange - Front	16Mo3	Angle iron	S-002035	1
015013	CA	Core air inlet air flange - Rear	16Mo3	Angle iron	S-002036	1
015014	CA	Core air inlet air flange - Fasteners	Gr 8.8	Fastener set	S-005018	28
015015	CA	Core air mounting flange	16Mo3	Plate - Circular	S-009014	1
015016	CA	Core air scroll mounting flange	16Mo3	Plate - Circular	S-009015	1

16 – FSMF
Fuel oil Scroll Mounting Flange
Component number: 16
Part count: 15

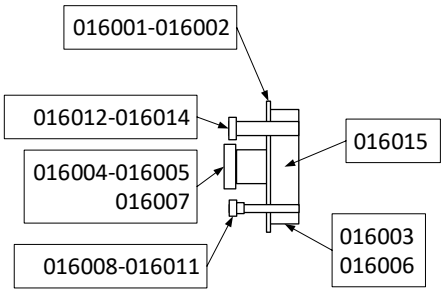

Code	Component	Item	Material	Shape	Shape code	QTY per burner
016001	FSMF	FSMF	16Mo3	Plate - Circular	S-009016	1
016002	FSMF	FSMF fasteners	16Mo3	Fastener set	S-005019	18
016003	FSMF	FSMF alignment ring to core air	S355JR	Plate - Rolled	S-012019	1
016004	FSMF	FSMF centre guide pipe	S355JR	Pipe	S-016007	1

Code	Component	Item	Material	Shape	Shape code	QTY per burner
016005	FSMF	FSMF centre pipe gland follower female	16Mo3	Machined component	S-019007	1
016006	FSMF	FSMF Gusset	S355JR	Plate - gusset	S-015008	3
016007	FSMF	FSMF centre pipe inner alignment ring	S355JR	Machined component	S-019008	1
016008	FSMF	FSMF flame scanner pipe	16Mo3	Pipe	S-016008	2
016009	FSMF	FSMF Flame scanner - 1.5 inch Socket weld union	16Mo3	Mechanical component	S-006019	1
016010	FSMF	FSMF Flame scanner threaded pipe with purge tap-in	16Mo3	Assembly - fabricated	S-013012	2
016011	FSMF	FSMF flame scanner pipe end cap	16Mo3	Machined component	S-019009	2
016012	FSMF	FSMF inspection pipe	16Mo3	Pipe	S-016009	1
016013	FSMF	FSMF inspection pipe reducer with external thread	16Mo3	Machined component	S-019010	1
016014	FSMF	FSMF inspection pipe end cap with view glass	16Mo3	Machined component	S-019011	1
016015	FSMF	FSMF refractory	Refractory	Refractory	S-018003	1

17 – FOS
Fuel Oil Scroll
Component number: 17
Part count: 9

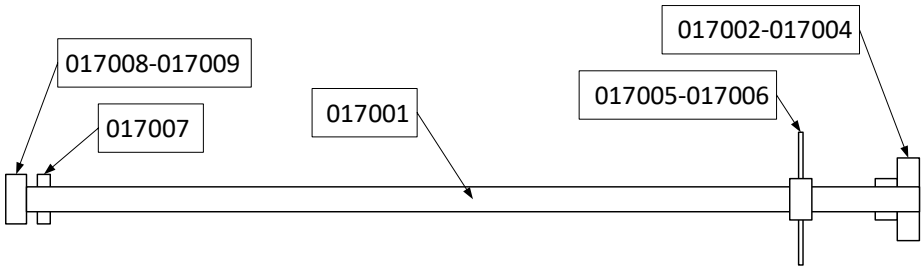

Code	Component	Item	Material	Shape	Shape code	QTY per burner
017001	FOS	FOS Tube	S355JR	Pipe	S-016010	1
017002	FOS	FOS swirler outer ring	SS310	Plate - Rolled	S-012020	1
017003	FOS	FOS swirler vanes	SS310	Plate - vane	S-020002	10
017004	FOS	FOS Swirler inner ring with locking nuts	SS310	Plate - Rolled	S-012021	1
017005	FOS	FOS Spider ring with locking nut	SS310	Plate - Rolled	S-012022	1
017006	FOS	FOS spider support rods	SS330	Rod	S-007012	3
017007	FOS	FOS Gland follower male	16Mo3	Machined component	S-019012	1
017008	FOS	FOS ventilating flange	16Mo3	Machined component	S-019013	1
017009	FOS	FOS ventilating block with carrier tube guide and lock nut	S355JR	Assembly - fabricated	S-013013	1

18 – CT
Carrier Tubes
Component number: 18
Part count: 4

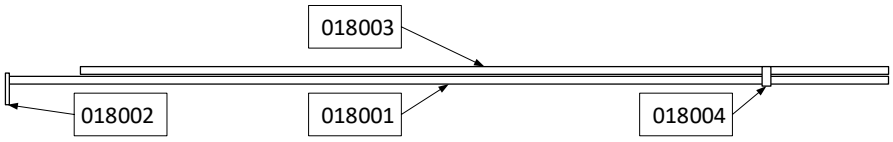

Code	Component	Item	Material	Shape	Shape code	QTY per burner
018001	CT	CT Oil lance	S355JR	Pipe	S-016011	1
018002	CT	CT Oil lance block mounting flange	S355JR	Assembly - fabricated	S-013014	1
018003	CT	CT Ignitor lance	S355JR	Pipe	S-016012	1
018004	CT	CT supports internal of scroll	S355JR	Assembly - fabricated	S-013015	1

Shape number

The component parts above were allocated a shape enable grouping together. The table below indicate the high level shape type and quantities. Each shape type has its own table to assist with pricing for repairs. Note that the purpose of the dimensions is to give guidance and not all dimensions is manufacturing dimensions. The contractor will be responsible to create manufacturing drawings for the components which must be approved prior manufacturing or repairs can commence.

Shape nr	Basic shape	Shape QTY
1	Plate - rectangular	50
2	Angle iron	36
3	Plate - square trapezium	12
4	C-channel	9
5	Fastener set	19
6	Mechanical component	19
7	Rod	12
8	Flat bar	16
9	Plate - Circular	16
10	Plate - Trap with hole cut	6
11	Stud	6
12	Plate - Rolled	22
13	Assembly - fabricated	15
14	Angle iron rolled	3
15	Plate - gusset	8
16	Pipe	12
17	Plate - cone	4
18	Refractory	3
19	Machined component	13
20	Plate - vane	2
21	Plate - Square to round forming	4
22	Liner - circular	7
23	Liner - square	6
24	Boiler serve SOW	4

Shape number 1
Shape type: Plate rectangular

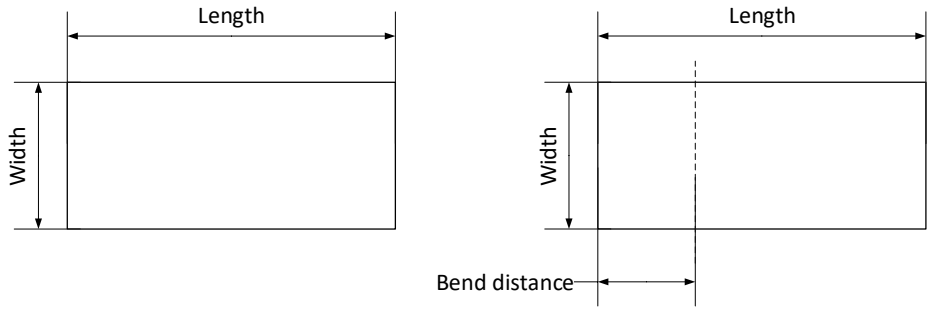

Shape code	Code	Item	Material	Comments	Length [mm]	Width [mm]	Bend distance from base [mm]	Bend angle [°]	Hole diameter [mm]	Hole quantity [-]	WT [mm]	Welds [m]	Area [m^2]	Volume [cm^3]
S-001001	001001	SAID Ducting - Left	16Mo3	None	1000	1480	N/A	N/A	N/A	N/A	10	1	1.48	14800
S-001002	001002	SAID Ducting - Right	16Mo3	None	1000	1480	N/A	N/A	N/A	N/A	10	1	1.48	14800
S-001003	001003	SAID Ducting - Front	16Mo3	None	1000	1600	N/A	N/A	N/A	N/A	10	1	1.6	16000
S-001004	001004	SAID Ducting - Rear	16Mo3	Square tap off for CAD 450x830	1000	1600	N/A	N/A	N/A	N/A	10	1	1.6	16000
S-001005	001009	SAID Core air tap off - Top - horizontal	16Mo3	None	270	830	N/A	N/A	N/A	N/A	6	1.93	0.2241	1344.6
S-001006	001010	SAID Core air tap off - Bottom - horizontal	16Mo3	None	110	830	N/A	N/A	N/A	N/A	6	1.77	0.0913	547.8

Shape code	Code	Item	Material	Comments	Length [mm]	Width [mm]	Bend distance from base [mm]	Bend angle [°]	Hole diameter [mm]	Hole quantity [-]	WT [mm]	Welds [m]	Area [m^2]	Volume [cm^3]
S-001007	001013	SAID Core air tap off - Rear - angled	16Mo3	None	280	830	N/A	N/A	N/A	N/A	6	1.94	0.2324	1394.4
S-001008	001014	SAID Core air tap off - Front - angled	16Mo3	None	120	830	N/A	N/A	N/A	N/A	6	1.78	0.0996	597.6
S-001009	002006	SAD Front Vane	S355JR	Slot for shaft both ends	1570	725	N/A	N/A	200	2	10	0	1.0754	10754.2
S-001010	002007	SAD Rear Vane	S355JR	Slot for shaft both ends	1570	725	N/A	N/A	200	2	10	0	1.0754	10754.2
S-001011	002008	SAD front-rear dividing plate	S355JR	None	1580	240	N/A	N/A	N/A	N/A	10	0.48	0.3792	3792
S-001012	003006	SAWB Side tapers (Left)	16Mo3	None	1256.4	1500	N/A	N/A	N/A	N/A	10	3	1.8846	18846.4
S-001013	003007	SAWB Side tapers (Right)	16Mo3	None	1256.4	1500	N/A	N/A	N/A	N/A	10	3	1.8846	18846.4
S-001014	003032	SAWB Inlet Internal stiffener Left Protection plate	VRN 400	None	1480	150	N/A	N/A	N/A	N/A	10	0.3	0.222	2220
S-001015	003034	SAWB Inlet Internal stiffener Centre Protection plate	VRN 400	None	1480	150	N/A	N/A	N/A	N/A	10	0.3	0.222	2220

Shape code	Code	Item	Material	Comments	Length [mm]	Width [mm]	Bend distance from base [mm]	Bend angle [°]	Hole diameter [mm]	Hole quantity [-]	WT [mm]	Welds [m]	Area [m^2]	Volume [cm^3]
S-001016	003036	SAWB Inlet Internal stiffener Right Protection plate	VRN 400	None	1480	150	N/A	N/A	N/A	N/A	10	0.3	0.222	2220
S-001017	005001	TNBC Rear Octagon flange	16Mo3	Octacton shape - overall length inserted	2460	2750	N/A	N/A	1800	1	12	0	4.2203	50643.7
S-001018	005002	TNBC Rear Octagon side - Small	16Mo4	None	1072	708.99	N/A	N/A	N/A	N/A	13	2.49	0.76	9880.55
S-001019	005003	TNBC Rear Octagon side - Medium	16Mo5	None	1072	1058.9	N/A	N/A	N/A	N/A	14	3.1898	1.1351	15891.6
S-001020	005004	TNBC Rear Octagon side - Large	16Mo6	None	1072	1200	N/A	N/A	N/A	N/A	15	3.472	1.2864	19296
S-001021	005005	TNBC Rear Octagon side - X-Large	16Mo7	None	1072	1286	N/A	N/A	N/A	N/A	16	3.644	1.3786	22057.5
S-001022	005009	TNBC Octagon external stiffeners	S355JR	Rounded corners	1000	150	N/A	N/A	N/A	N/A	40	1	0.15	6000
S-001023	006001	BS Swivel	S355JR	Two bends forming a U - hole 60 mm from ends	540	130	360	90	42	2	16	0	0.0674	1078.87

Shape code	Code	Item	Material	Comments	Length [mm]	Width [mm]	Bend distance from base [mm]	Bend angle [°]	Hole diameter [mm]	Hole quantity [-]	WT [mm]	Welds [m]	Area [m^2]	Volume [cm^3]
S-001024	009001	PFI Outlet flange - Left	S355JR	None	898	105	N/A	N/A	N/A	N/A	15	1.901	0.0943	1414.35
S-001025	009002	PFI Outlet flange - Right	S355JR	None	898	106	N/A	N/A	N/A	N/A	15	1.902	0.0952	1427.82
S-001026	009003	PFI Outlet flange - Front	S355JR	None	1099	92	N/A	N/A	N/A	N/A	15	0.092	0.1011	1516.62
S-001027	009004	PFI Outlet flange - Rear	S355JR	None	1099	93	N/A	N/A	N/A	N/A	15	0.093	0.1022	1533.11
S-001028	009010	PFI inlet round to square - Left straight insert	S355JR	None	687	65	N/A	N/A	N/A	N/A	12	0.752	0.0447	535.86
S-001029	009011	PFI inlet round to square - Right straight insert	S355JR	None	687	65	N/A	N/A	N/A	N/A	12	0.752	0.0447	535.86
S-001030	009012	PFI inlet round to square - Front straight insert	S355JR	None	896	65	N/A	N/A	N/A	N/A	12	0.961	0.0582	698.88
S-001031	009013	PFI inlet round to square - Rear straight insert	S355JR	None	896	65	N/A	N/A	N/A	N/A	12	0.961	0.0582	698.88
S-001032	010007	PF burner tube liner transition - Left	16Mo3	None	706.5	50	N/A	N/A	N/A	N/A	10	0	0.0353	353.25
S-001033	010008	PF burner tube liner transition - Right	16Mo3	None	706.5	50	N/A	N/A	N/A	N/A	10	0	0.0353	353.25
S-001034	010011	PF burner cone liner transition - Left	16Mo3	None	331	50	N/A	N/A	N/A	N/A	10	0	0.0166	165.5

Shape code	Code	Item	Material	Comments	Length [mm]	Width [mm]	Bend distance from base [mm]	Bend angle [°]	Hole diameter [mm]	Hole quantity [-]	WT [mm]	Welds [m]	Area [m^2]	Volume [cm^3]
S-001035	010012	PF burner cone liner transition - Right	16Mo3	None	331	50	N/A	N/A	N/A	N/A	10	0	0.0166	165.5
S-001036	010014	PF burner inlet - Left	16Mo3	None	582.55	787	N/A	N/A	22	12	10	1.1651	0.4539	4539.05
S-001037	010015	PF burner inlet - Right	16Mo3	None	582.55	787	N/A	N/A	22	12	10	1.1651	0.4539	4539.05
S-001038	010026	PF Burner inlet flange - Front	16Mo3	None	1240	119	N/A	N/A	22	7	16	2.599	0.1449	2318.39
S-001039	010027	PF Burner inlet flange - Rear	16Mo3	None	1240	119	N/A	N/A	22	7	16	2.599	0.1449	2318.39
S-001040	010028	PF Burner inlet flange - Left	16Mo3	None	787	120.5	N/A	N/A	22	6	16	0.1205	0.0926	1480.84
S-001041	010029	PF Burner inlet flange - Right	16Mo3	None	787	120.5	N/A	N/A	22	6	16	0	0.0926	1480.84
S-001042	010043	PF Burner Top front external lifting lug	S355JR	Rounded edge with hole	90	90	N/A	N/A	50	1	25	0.09	0.0061	153.413
S-001043	010044	PF Burner Top mounting flange internal lifting lug	S355JR	Rounded edge with hole	125	130	N/A	N/A	70	1	25	0.13	0.0124	310.039
S-001044	012006	CADI Ducting - Left	16Mo3	None	1010	438	N/A	N/A	N/A	N/A	6	1.01	0.4424	2654.28
S-001045	012007	CADI Ducting - Right	16Mo3	None	1010	438	N/A	N/A	N/A	N/A	6	1.01	0.4424	2654.28
S-001046	012008	CADI Ducting - Front	16Mo3	None	1010	830	N/A	N/A	N/A	N/A	6	1.01	0.8383	5029.8

Shape code	Code	Item	Material	Comments	Length [mm]	Width [mm]	Bend distance from base [mm]	Bend angle [°]	Hole diameter [mm]	Hole quantity [-]	WT [mm]	Welds [m]	Area [m^2]	Volume [cm^3]
S-001047	012009	CADI Ducting - Rear	16Mo3	None	1010	830	N/A	N/A	N/A	N/A	6	1.01	0.8383	5029.8
S-001048	013012	CAD Vane	S355JR	None	808	192	N/A	N/A	N/A	N/A	10	0.808	0.1551	1551.36
S-001049	015008	Core air inlet - Left	16Mo3	None	631.52	450	945	13.079	N/A	N/A	6	1.713	0.2842	1705.09
S-001050	015009	Core air inlet - Right	16Mo3	None	631.52	450	945	-13.08	N/A	N/A	6	1.713	0.2842	1705.09

Shape number 2
Shape type: Angle Iron

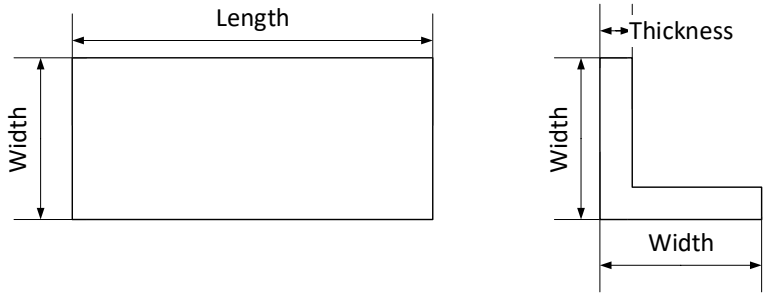

Shape code	Code	Item	Material	Comments	Length [mm]	Width [mm]	Hole diameter [mm]	Hole quantity [-]	WT [mm]	Welds [m]	Area [m^2]	Volume [cm^3]
S-002001	001005	SAID Outlet flange - Left	S355JR	None	1640	70	18	14	6	3.42	0.23	1356.22
S-002002	001006	SAID Outlet flange - Right	S355JR	None	1640	70	18	14	6	3.42	0.23	1356.22
S-002003	001007	SAID Outlet flange - Front	S355JR	None	1600	70	18	13	6	3.34	0.22	1324.15
S-002004	001008	SAID Outlet flange - Rear	S355JR	None	1600	70	18	13	6	3.34	0.22	1324.15
S-002005	001017	SAID Core air tap off outlet flange - Left	S355JR	None	550	50	18	6	6	1.2	0.05	320.84
S-002006	001018	SAID Core air tap off outlet flange - Right	S355JR	None	550	50	18	6	6	1.2	0.05	320.84
S-002007	001019	SAID Core air tap off outlet flange - Front	S355JR	None	830	50	18	8	6	1.76	0.08	485.79

Shape code	Code	Item	Material	Comments	Length [mm]	Width [mm]	Hole diameter [mm]	Hole quantity [-]	WT [mm]	Welds [m]	Area [m^2]	Volume [cm^3]
S-002008	001020	SAID Core air tap off outlet flange - Rear	S355JR	None	830	50	18	8	6	1.76	0.08	485.79
S-002009	003008	SAWB Damper flange (Front)	S355JR	None	1600	70	18	13	6	3.34	0.22	1324.15
S-002010	003009	SAWB Damper flange (Left)	S355JR	None	1640	70	18	14	6	3.42	0.23	1356.22
S-002011	003010	SAWB Damper flange (Rear)	S355JR	None	1600	70	18	13	6	3.34	0.22	1324.15
S-002012	003011	SAWB Damper flange (Right)	S355JR	None	1640	70	18	14	6	3.42	0.23	1356.22
S-002013	005010	TNBC Octagon angle iron for mounting to tube wall - small	S355JR	None	708.99	60	N/A	N/A	8	1.538	0.09	680.63
S-002014	005011	TNBC Octagon angle iron for mounting to tube wall - Medium	S355JR	None	1058.9	60	N/A	N/A	8	2.2378	0.13	1016.52
S-002015	005012	TNBC Octagon angle iron for mounting to tube wall - Large	S355JR	None	1200	60	N/A	N/A	8	2.52	0.14	1152.00
S-002016	005013	TNBC Octagon angle iron for mounting to tube wall - X-large	S355JR	None	1286	60	N/A	N/A	8	2.692	0.15	1234.56
S-002017	012001	CADI Inlet flange - Left	S355JR	None	550	50	18	6	6	1.2	0.05	320.84

Shape code	Code	Item	Material	Comments	Length [mm]	Width [mm]	Hole diameter [mm]	Hole quantity [-]	WT [mm]	Welds [m]	Area [m^2]	Volume [cm^3]
S-002018	012002	CADI Inlet flange - Right	S355JR	None	550	50	18	6	6	1.2	0.05	320.84
S-002019	012003	CADI Inlet flange - Front	S355JR	None	830	50	18	8	6	1.76	0.08	485.79
S-002020	012004	CADI Inlet flange - Rear	S355JR	None	830	50	18	8	6	1.76	0.08	485.79
S-002021	012010	CADI Outlet flange - Left	S355JR	None	550	50	18	6	6	1.2	0.05	320.84
S-002022	012011	CADI Outlet flange - Right	S355JR	None	550	50	18	6	6	1.2	0.05	320.84
S-002023	012012	CADI Outlet flange - Front	S355JR	None	830	50	18	8	6	1.76	0.08	485.79
S-002024	012013	CADI Outlet flange - Rear	S355JR	None	830	50	18	8	6	1.76	0.08	485.79
S-002025	014001	CADB Inlet flange - Left	S355JR	None	550	50	18	6	6	1.2	0.05	320.84
S-002026	014002	CADB Inlet flange - Right	S355JR	None	550	50	18	6	6	1.2	0.05	320.84
S-002027	014003	CADB Inlet flange - Front	S355JR	None	830	50	18	8	6	1.76	0.08	485.79
S-002028	014004	CADB Inlet flange - Rear	S355JR	None	830	50	18	8	6	1.76	0.08	485.79
S-002029	014014	CADB Outlet flange - Left	S355JR	None	550	50	18	6	6	1.2	0.05	320.84
S-002030	014015	CADB Outlet flange - Right	S355JR	None	550	50	18	6	6	1.2	0.05	320.84
S-002031	014016	CADB Outlet flange - Front	S355JR	None	830	50	18	8	6	1.76	0.08	485.79
S-002032	014017	CADB Outlet flange - Rear	S355JR	None	830	50	18	8	6	1.76	0.08	485.79

Shape code	Code	Item	Material	Comments	Length [mm]	Width [mm]	Hole diameter [mm]	Hole quantity [-]	WT [mm]	Welds [m]	Area [m^2]	Volume [cm^3]
S-002033	015010	Core air inlet air flange - Left	16Mo3	None	550	50	18	6	6	1.2	0.05	320.84
S-002034	015011	Core air inlet air flange - Right	16Mo3	None	550	50	18	6	6	1.2	0.05	320.84
S-002035	015012	Core air inlet air flange - Front	16Mo3	None	830	50	18	8	6	1.76	0.08	485.79
S-002036	015013	Core air inlet air flange - Rear	16Mo3	None	830	50	18	8	6	1.76	0.08	485.79

Shape number 3
Shape type: Plate - square trapezium

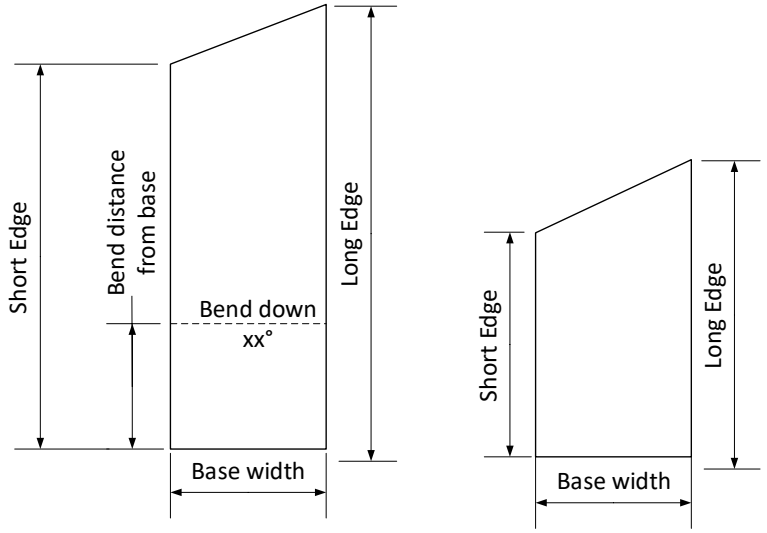

Shape code	Code	Item	Material	Base width [mm]	Long edge [mm]	Short edge [mm]	Bend distance from base [mm]	Longest edge on Right, base at bottom, bend downward (away) [°]	WT [mm]	Welds [m]	Area [m^2]	Volume [cm^3]
S-003001	001011	SAID Core air tap off - Left - horizontal	16Mo3	438	270	110	N/A	N/A	6	0.38	0.08	499.32
S-003002	001012	SAID Core air tap off - right - horizontal	16Mo3	438	270	110	N/A	N/A	6	0.38	0.08	499.32
S-003003	001015	SAID Core air tap off - Left - angled	16Mo3	438	280	120	N/A	N/A	6	0.87	0.09	525.60

Shape code	Code	Item	Material	Base width [mm]	Long edge [mm]	Short edge [mm]	Bend distance from base [mm]	Longest edge on Right, base at bottom, bend downward (away) [°]	WT [mm]	Welds [m]	Area [m^2]	Volume [cm^3]
S-003004	001016	SAID Core air tap off - right - angled	16Mo3	438	280	120	N/A	N/A	6	0.87	0.09	525.60
S-003005	014006	CADB Ducting above bend - Left	16Mo3	438	362	158	N/A	N/A	6	0.52	0.11	683.28
S-003006	014007	CADB Ducting above bend - Right	16Mo3	438	362	158	N/A	N/A	6	0.52	0.11	683.28
S-003007	014008	CADB Ducting above bend - Front	16Mo3	830	332	223	158	40	6	0.00	0.23	1381.95
S-003008	014009	CADB Ducting above bend - Rear	16Mo3	830	740	629	362	40	6	0.00	0.57	3408.81
S-003009	014010	CADB Ducting below bend - Left	16Mo3	438	771	567	393	15	6	1.82	0.29	1758.13
S-003010	014011	CADB Ducting below bend - Right	16Mo3	438	551	349	284	15	6	1.38	0.20	1182.60
S-003011	014012	CADB Ducting below bend - Front	16Mo3	830	393	284	N/A	N/A	6	0.84	0.28	1685.73
S-003012	014013	CADB Ducting below bend - Rear	16Mo3	830	393	284	N/A	N/A	6	0.84	0.28	1685.73

Shape number 4
Shape type: C-Channel

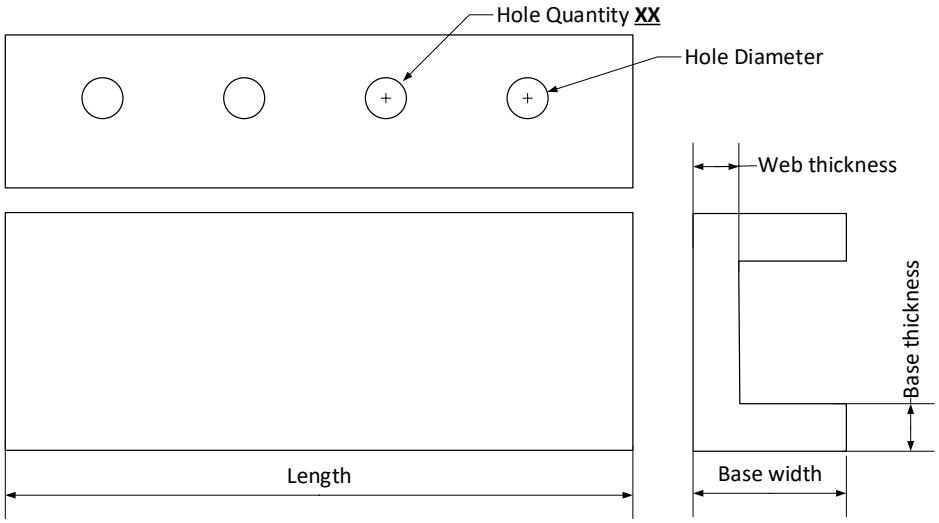

Shape code	Code	Item	Material	Comments	Base width [mm]	Height [mm]	Web thickness [mm]	Base thickness [mm]	Hole diameter [mm]	Hole quantity [mm]	WT [mm]	Welds [m]	Area [m^2]	Volume [cm^3]
S-004001	002001	SAD Casing (Front)	S355JR	None	90	240	8.5	13	18	26	13	0.84	0.66	6920.40
S-004002	002002	SAD Casing (Left)	S355JR	None	90	240	8.5	13	18	28	13	0.00	0.71	7358.40
S-004003	002003	SAD Casing (Rear)	S355JR	None	90	240	8.5	13	18	26	13	0.84	0.66	6920.40
S-004004	002004	SAD Casing (Right)	S355JR	None	90	240	8.5	13	18	28	13	0.00	0.71	7358.40
S-004005	013001	CAD Casing - Left	16Mo3	None	65	140	6	9.5	18	12	9.5	0.00	0.15	1178.60
S-004006	013002	CAD Casing - Right	16Mo3	None	65	140	6	9.5	18	12	9.5	0.00	0.15	1178.60

Shape code	Code	Item	Material	Comments	Base width [mm]	Height [mm]	Web thickness [mm]	Base thickness [mm]	Hole diameter [mm]	Hole quantity [mm]	WT [mm]	Welds [m]	Area [m^2]	Volume [cm^3]
S-004007	013003	CAD Casing - Front	16Mo3	None	65	140	6	9.5	18	16	9.5	0.54	0.22	1697.35
S-004008	013004	CAD Casing - Rear	16Mo3	None	65	140	6	9.5	18	16	9.5	0.54	0.22	1697.35
S-004009	013007	CAD DE Bearing Mounting bracket	S355JR	Centre hole 42 mm for shaft	65	140	6	9.5	10	4	9.5	0.24	0.03	249.00

Shape number 5
Shape type: Fastener set

Shape code	Code	Item	Material	Comments	Size	Bolt	Nut	Washer	Dog clamp	Pin	Split pin
S-005001	002005	SAD Casing - fasteners	Gr 8.8	None	M16	1	1	2	0	0	0
S-005002	003004	SAWB Rear plate Fasteners	Gr 8.8	None	M20	0	1	1	1	0	0
S-005003	003012	SAWB Damper flange - fasteners	Gr 8.8	None	M20	0	1	1	1	0	0
S-005004	003028	SAWB Cone mounting fasteners	Gr 8.8	None	M16	1	1	2	0	0	0
S-005005	005007	TNBC Rear flange fasteners for SAWB	Gr 8.8	None	M20	0	1	1	1	0	0
S-005006	006002	BS fasteners	Gr 8.8	None	M42	1	2	2	0	0	0
S-005007	006005	BS Swivel connecting pin with split pins	S355JR	Pins with split pins	40 mm	0	0	2	0	1	2
S-005008	008009	SASI wheels fasteners	Gr 8.8	None	M16	1	1	1	0	0	0
S-005009	010021	PF Burner Core air Fasteners	Gr 8.8	None	M20	0	1	1	1	0	0
S-005010	010022	PF burner Left C-Door Fasteners	Gr 8.8	None	M20	0	1	1	1	0	0
S-005011	010023	PF burner Right C-Door Fasteners	Gr 8.8	None	M20	0	1	1	1	0	0
S-005012	011002	PF liners Row A - Fastener set	Gr 8.8	None	M20	1	1	1	0	0	0
S-005013	011007	PF liners Row D - Fastener	Gr 8.8	None	M20	1	1	1	0	0	0
S-005014	011016	PF liners Inlet - Bolts	Gr 8.8	None	M20	1	0	1	0	0	0
S-005015	012005	CADI Inlet flange - Fasteners	Gr 8.8	None	M16	1	1	2	0	0	0
S-005016	013005	CAD Casing - Fasteners	Gr 8.8	None	M16	1	1	2	0	0	0

Shape code	Code	Item	Material	Comments	Size	Bolt	Nut	Washer	Dog clamp	Pin	Split pin
S-005017	014005	CADB Inlet flange - Fasteners	Gr 8.8	None	M16	1	1	2	0	0	0
S-005018	015014	Core air inlet air flange - Fasteners	Gr 8.8	None	M16	1	1	2	0	0	0
S-005019	016002	FSMF fasteners	16Mo3	None	M16	1	1	2	0	0	0

Shape number 6
Shape type: Mechanical component

Shape code	Code	Item	Material	Comments	Welds [m]
S-006001	002009	SAD Front Left Bearing	Various	45 mm flange mounted pillow block	None
S-006002	002012	SAD Front Right Bearing	Various	45 mm flange mounted pillow block	None
S-006003	002015	SAD Rear Left Bearing	Various	45 mm flange mounted pillow block	None
S-006004	002018	SAD Rear Right Bearing	Various	45 mm flange mounted pillow block	None
S-006005	002025	SAD Rear damper linking arm	Various	Fit on 45 mm shaft radius 250 mm	None
S-006006	002026	SAD Front damper linking arm	Various	Fit on 45 mm shaft radius 250 mm	None
S-006007	002027	SAD Front damper actuator arm	Various	Fit on 45 mm shaft radius 250 mm	None
S-006008	003015	SAWB inspection hatch door hinges	S355JR	Shelf item	0.20
S-006009	003016	SAWB inspection hatch door locking mechanism	S355JR	Shelf item	0.20
S-006010	007006	SASE Main gearbox	Various	No drawing	None
S-006011	007007	SASE Secondary gearbox	Various	No drawing	None
S-006012	007009	SASE Secondary gearbox - universal joint (1.25x3.75 inch)	S355JR	Shelf item	0.10
S-006013	008006	SASI Adjusting rod - universal joint (2x5.44 inch)	S355JR	Shelf item	0.16
S-006014	010004	PF burner ring	16Mo3	Casted VRN 400 ring	3.28
S-006015	013006	CAD DE Bearing	Various	25 mm flange mounted pillow block	None
S-006016	013011	CAD Gland follower packing	Packing	20x20 mm square packing	None
S-006017	013019	CAD DE Arm	Various	Fit on 25 mm shaft radius 250 mm	None
S-006018	014018	CADB calibration tap off socket - 3/4 inch	16Mo3	1/4" BSPT to 1/2" BSPP	0.06
S-006019	016009	FSMF Flame scanner - 1.5 inch Socket weld union	16Mo3	1.5 inch Socket weld union	0.12

Shape number 7
Shape type: Rod

Shape code	Code	Item	Material	Comments	OD [mm]	Length [mm]	Rolled ID [mm]	Welds [m]	Area [m^2]	WT [mm]	Welds [m]	Area [m^2]	Volume [cm^3]
S-007001	002010	SAD Front Left Shaft	S355JR	None	45	430	N/A	0.545	0.0016	45	0.55	0.00	683.89
S-007002	002013	SAD Front Right Shaft	S355JR	None	45	330	N/A	0.59	0.0016	45	0.59	0.00	524.84
S-007003	002016	SAD Rear Left Shaft	S355JR	None	45	430	N/A	0.635	0.0016	45	0.64	0.00	683.89
S-007004	002019	SAD Rear Right Shaft	S355JR	None	45	330	N/A	0.68	0.0016	45	0.68	0.00	524.84
S-007005	004004	SAC centralising pins	S355JR	10 for saddles and 12.5 clearance	40	245	N/A	0.04	0.0013	40	0.04	0.00	307.88
S-007006	007008	SASE Secondary gearbox links	S355JR	None	30	200	N/A	0.03	0.0007	30	0.03	0.00	141.37
S-007007	008003	SASI inner ring	S355JR	Rolled to form ring	20	3512.3	1098	0.02	0.0003	20	0.02	0.00	1103.42
S-007008	008004	SASI Adjusting rod - unthreaded	S355JR	None	30	2660	N/A	0.03	0.0007	30	0.03	0.00	1880.24
S-007009	008005	SASI Adjusting rod - threaded	S355JR	None	30	500	N/A	0.03	0.0007	30	0.03	0.00	353.43
S-007010	010039	PF Burner swirler wheels rail rod	S355JR	None	10	900	N/A	1.8	0.0001	10	1.80	0.00	70.69
S-007011	013018	CAD Shaft	S355JR	DE Key slot for driving arm Holes in shaft for fixing damper to shaft	25	1118	N/A	0	0.0005	25	0.00	0.00	548.80
S-007012	017006	FOS spider support rods	SS330	Core air inlet min ID 580, spider ring OD 180, diff 400, 200 per side, 10 tolerance	20	190	N/A	0.02	0.0003	20	0.02	0.00	59.69

Shape number 8
Shape type: Flat bar

Shape code	Code	Item	Material	Comments	Length [mm]	Width [mm]	WT [mm]	Welds [m]	Area [m^2]	Volume [cm^3]
S-008001	002011	SAD Front Left Seal	S355JR	None	1560	10	10	1.58	0.02	156.00
S-008002	002014	SAD Front Right Seal	S355JR	None	1560	10	10	1.58	0.02	156.00
S-008003	002017	SAD Rear Left Seal	S355JR	None	735	10	10	0.74	0.01	73.50
S-008004	002020	SAD Rear Right Seal	S355JR	None	735	10	10	0.74	0.01	73.50
S-008005	002021	SAD Front Front seal	S355JR	None	1560	10	10	1.58	0.02	156.00
S-008006	002022	SAD Front Rear Seal	S355JR	None	1560	10	10	1.58	0.02	156.00
S-008007	002023	SAD Rear Front Seal	S355JR	None	735	10	10	0.74	0.01	73.50
S-008008	002024	SAD Rear Rear Seal	S355JR	None	735	10	10	0.74	0.01	73.50
S-008009	008007	SASI sliding wheels link	S355JR	None	540	40	10	0.16	0.02	216.00
S-008010	008010	SASI Position indicator	SS310	Stamped indicator	350	20	2	0.04	0.01	14.00
S-008011	010037	PF Burner swirler wheels rail base	S355JR	None	900	65	10	0.97	0.06	585.00
S-008012	010038	PF Burner swirler wheels rail support	S355JR	None	700	40	10	1.44	0.03	280.00
S-008013	013014	CAD Seal - Left	S355JR	None	438	10	10	0.44	0.00	43.80
S-008014	013015	CAD Seal - Right	S355JR	None	438	10	10	0.44	0.00	43.80
S-008015	013016	CAD Seal - Front	S355JR	None	798	10	10	0.82	0.01	79.80
S-008016	013017	CAD Seal - Rear	S355JR	None	798	10	10	0.82	0.01	79.80

Shape number 9
Shape type: Plate - Circular

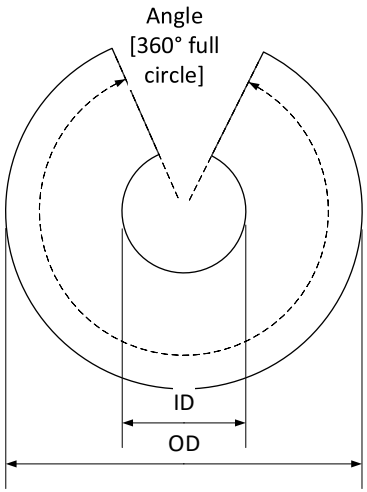

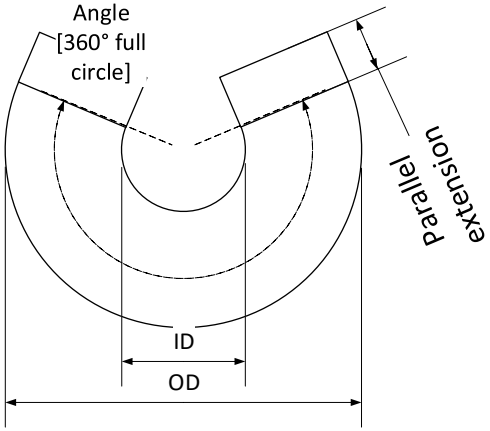

Shape code	Code	Item	Material	Comments	OD [mm]	ID [mm]	Angle [°]	Parallel extension [mm]	Hole diameter [mm]	Hole quantity [-]	WT [mm]	Welds [m]	Area [m^2]	Volume [cm^3]
S-009001	003001	SAWB Rear bottom circular flange	16Mo3	None	2240	1890	206	0	0	0	10	4.73	0.65	6496.40
S-009002	003023	SAWB Front bottom circular casing	16Mo3	None	2240	1890	206	0	0	0	10	4.73	0.65	6496.40
S-009003	004001	SAC Inlet flange	S355JR	None	1860	1800	360	0	0	0	10	5.71	0.17	1724.73
S-009004	007001	SASE flange distance piece front flange	S355JR	None	170	74	360	0	14	4	10	0.23	0.02	177.81
S-009005	007004	SASE flange distance piece rear flange	S355JR	None	250	151	360	0	14	4	10	0.47	0.03	305.64

Shape code	Code	Item	Material	Comments	OD [mm]	ID [mm]	Angle [°]	Parallel extension [mm]	Hole diameter [mm]	Hole quantity [-]	WT [mm]	Welds [m]	Area [m^2]	Volume [cm^3]
S-009006	007005	SASE external large flange	S355JR	Flat bottom with support flanges for gearbox x 3	1100	850	270	0	115	3	12	0.00	0.26	3072.01
S-009007	007012	SASI adjusting ratchet	S355JR	8 x Slots cut in to lock	110	50	360	0	0	0	6	0.16	0.01	45.24
S-009008	008002	SASI cone flange	S355JR	None	1860	1780	360	0	N/A	N/A	10	5.59	0.23	2287.08
S-009009	008008	SASI wheels	S355JR	None	80	18	360	0	N/A	N/A	12	0.00	0.00	57.26
S-009010	010024	PF Burner C-Door (Outer)	16Mo3	None	628	393	70	25	N/A	N/A	10	0.00	0.05	483.92
S-009011	010025	PF Burner C-Door (Inner)	16Mo3	None	603	418	70	0	N/A	N/A	10	0.99	0.03	288.46
S-009012	010032	PF Burner mounting flange	16Mo3	Note, ID has step change to 965 mm for 140°	1960	1065	360	0	N/A	N/A	12	3.35	2.13	25516.41
S-009013	010034	PF Burner swirler gland cover Flange	S355JR	None	170	115	360	0	14	4	10	0.36	0.01	116.95
S-009014	015015	Core air mounting flange	16Mo3	None	700	600	360	0	N/A	N/A	10	1.88	0.10	1021.02

Shape code	Code	Item	Material	Comments	OD [mm]	ID [mm]	Angle [°]	Parallel extension [mm]	Hole diameter [mm]	Hole quantity [-]	WT [mm]	Welds [m]	Area [m^2]	Volume [cm^3]
S-009015	015016	Core air scroll mounting flange	16Mo3	None	700	600	360	0	18	18	12	1.88	0.10	1170.26
S-009016	016001	FSMF	16Mo3	3 x holes cut for flame scanners and inspection pipes	700	220	360	0	18	18	20	0.00	0.34	6845.03

Shape number 10
Shape type: Plate - Trap with hole cut

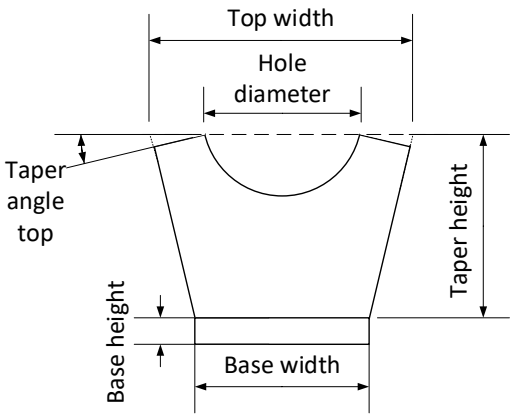

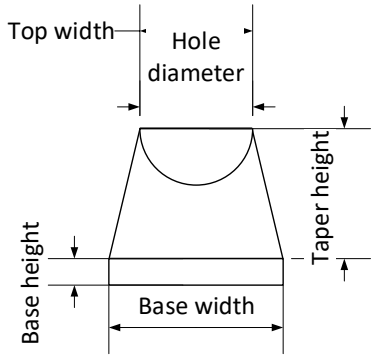

Shape code	Code	Item	Material	Comments	Base width [mm]	Top width [mm]	Base height [mm]	Taper height [mm]	Hole OD [mm]	WT [mm]	Welds [m]	Area [m^2]	Volume [cm^3]
S-010001	003002	SAWB Rear top trapezium flange	16Mo3	None	1600	2240	85	1515	1890	10	0.00	0.71	7123.05
S-010002	003024	SAWB Front top trapezium casing	16Mo3	None	1600	2240	85	1515	1890	10	0.00	0.71	7123.05
S-010003	010016	PF Burner inlet - Rear	16Mo3	None	1154.1	1477	0	1800	640	10	0.00	1.73	17275.35
S-010004	010017	PF burner inlet - Front	16Mo3	None	1154.1	1477	0	1800	640	10	0.00	1.73	17275.35
S-010005	015006	Core air inlet - Front	16Mo3	None	830	600	55	495	600	6	0.94	0.27	1648.61
S-010006	015007	Core air inlet - Rear	16Mo3	None	830	600	55	495	600	6	0.94	0.27	1648.61

Shape number 11
Shape type: Stud

Shape code	Code	Item	Material	Size	Length [mm]	Length [mm]	Welds [m]
S-011001	003003	SAWB Rear plate studs	Gr 8.8	M20	80	80	0.06
S-011002	003027	SAWB Cone mounting studs	Gr 8.8	M20	80	80	0.06
S-011003	005006	TNBC Rear flange studs for SAWB	Gr 8.8	M20	70	70	0.06
S-011004	010018	PF Burner Core air studs	Gr 8.8	M20	70	70	0.06
S-011005	010019	PF burner Left C-Door studs	Gr 8.8	M20	70	70	0.06
S-011006	010020	PF burner Right C-Door studs	Gr 8.8	M20	70	70	0.06

Shape number 12
Shape type: Plate - Rolled

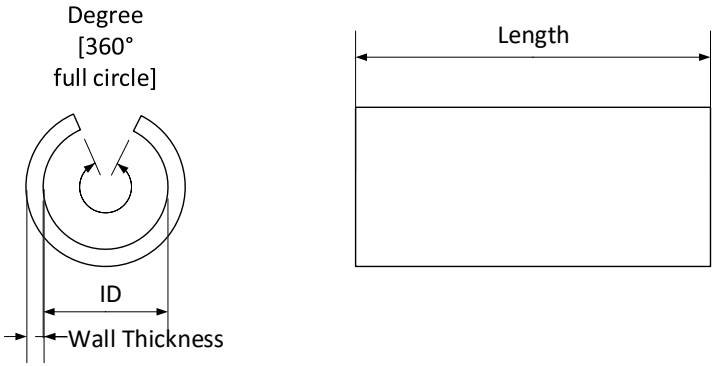

Shape code	Code	Item	Material	Comments	ID [mm]	Length [mm]	Degree [°]	WT [mm]	Welds [m]	Area [m^2]	Volume [cm^3]
S-012001	003005	SAWB Bottom Circular	16Mo3	None	2220	1500	206	10	11.02	6.04	60132.70
S-012002	003013	SAWB inspection hatch side walls	16Mo3	None	500	1500	360	6	1.81	0.35	2098.33
S-012003	003021	SAWB attachment lug for fixed support Saddle - Left	S355JR	None	2240	1500	45	10	2.57	0.35	3534.29
S-012004	003022	SAWB attachment lug for fixed support Saddle - Right	S355JR	None	2240	1500	45	10	2.57	0.35	3534.29
S-012005	003025	SAWB Front distance piece tube	16Mo3	None	1780	1500	360	10	11.66	2.33	23168.62
S-012006	004003	SAC Tube	S355JR	None	1500	1500	360	10	5.27	2.51	24904.98
S-012007	004005	SAC centralising pins saddles	S355JR	None	1480	1500	5	10	0.26	0.00	42.26
S-012008	009014	PFI pipe up to cut off plate	S355JR	None	686	1500	360	12	3.69	3.35	39470.97
S-012009	010001	PF Burner Tip	SS310	None	945	1500	360	10	3.60	1.82	18001.33
S-012010	010003	PF burner tube	16Mo3	None	945	1500	360	10	3.90	2.73	27001.99
S-012011	010005	PF burner tube Liner back casing	16Mo3	None	1045	1500	220	10	3.38	1.38	13671.82
S-012012	010006	PF burner tube Liner bottom casing	16Mo3	None	945	1500	140	10	2.52	0.80	7875.58
S-012013	010013	PF burner inlet liner backing tube	16Mo3	None	1357	1500	220	10	4.20	2.08	20654.43

Shape code	Code	Item	Material	Comments	ID [mm]	Length [mm]	Degree [°]	WT [mm]	Welds [m]	Area [m^2]	Volume [cm^3]
S-012014	015001	Core air tip	SS310	None	600	1500	360	10	2.42	0.97	9581.86
S-012015	015002	Core air tube	16Mo3	None	600	1500	360	10	3.00	2.11	20792.63
S-012016	015003	Core air sleeved internal	16Mo3	None	580	1500	360	10	3.34	2.80	27497.26
S-012017	015004	Core air sleeve	16Mo3	None	610	1500	360	10	6.86	2.94	28895.43
S-012018	015005	Core air external	16Mo3	Square cut for inlet	580	1500	360	10	2.61	1.42	13947.89
S-012019	016003	FSMF alignment ring to core air	S355JR	None	558	1500	360	6	1.87	0.18	1063.11
S-012020	017002	FOS swirler outer ring	SS310	None	368	1500	350	3.5	0.10	0.11	397.14
S-012021	017004	FOS Swirler inner ring with locking nuts	SS310	Size deviation to align with FOS pipe standard	170	1500	360	3.5	0.20	0.11	381.55
S-012022	017005	FOS Spider ring with locking nut	SS310	Size deviation to align with FOS pipe standard	170	1500	360	5	0.08	0.04	206.17

Shape number 13
Shape type: Assembly - fabricated

Shape code	Code	Item	Material
S-013001	003014	SAWB inspection hatch door	16Mo3
S-013002	003017	SAWB lifting lug - Left	S355JR
S-013003	003018	SAWB lifting lug - Right	S355JR
S-013004	003019	SAWB attachment lug for fixed support - Left	S355JR
S-013005	003020	SAWB attachment lug for fixed support - Right	S355JR
S-013006	006003	BS Long pipe assembly	S355JR
S-013007	006004	BS Short pipe assembly	S355JR
S-013008	007010	SASE Position sleeve with flange, rib and lock nut	S355JR
S-013009	007011	SASE Secondary gearbox extending rod covers	S355JR
S-013010	010040	PF Burner Left Lifting beam	S355JR
S-013011	010042	PF Burner Right Lifting beam	S355JR
S-013012	016010	FSMF Flame scanner threaded pipe with purge tap-in	16Mo3
S-013013	017009	FOS ventilating block with carrier tube guide and lock nut	S355JR
S-013014	018002	CT Oil lance block mounting flange	S355JR
S-013015	018004	CT supports internal of scroll	S355JR

Shape number 14
Shape type: Angle iron rolled

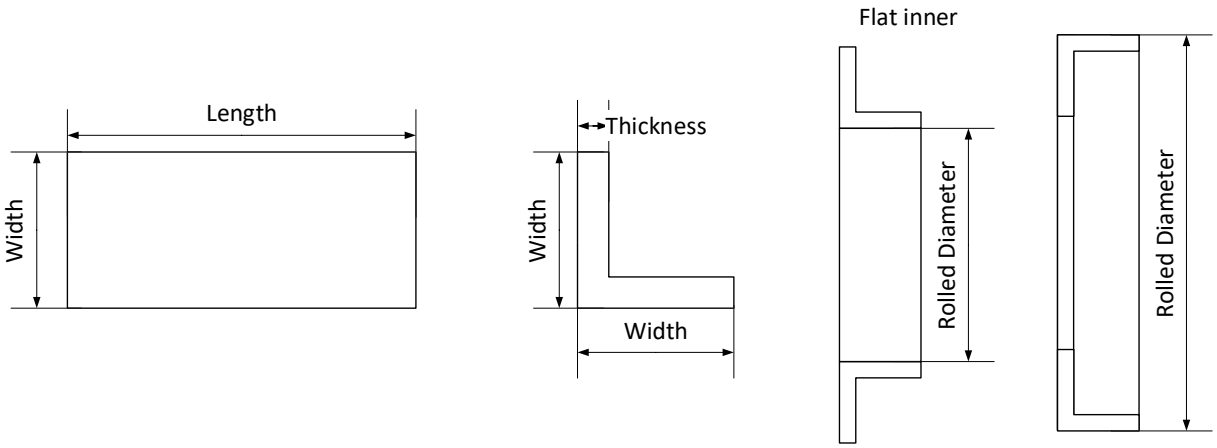

Shape code	Code	Item	Material	Comments	Flat - inner or outer	Rolled Diameter [mm]	Width [mm]	Width [mm]	WT [mm]	Welds [m]	Area [m^2]	Volume [cm^3]
S-014001	003026	SAWB Cone mounting flange	S355JR	None	Outer	1780	80	80	8	11.344	0.89	7157.80
S-014002	003029	SAWB Mounting flange to tube nest casing	S355JR	None	Inner	1800	90	90	10	11.49	1.02	10178.76
S-014003	004006	SAC Mounting flange	S355JR	None	Inner	1520	45	45	6	9.6404	0.43	2578.62

Shape number 15
Shape type: Plate – gusset

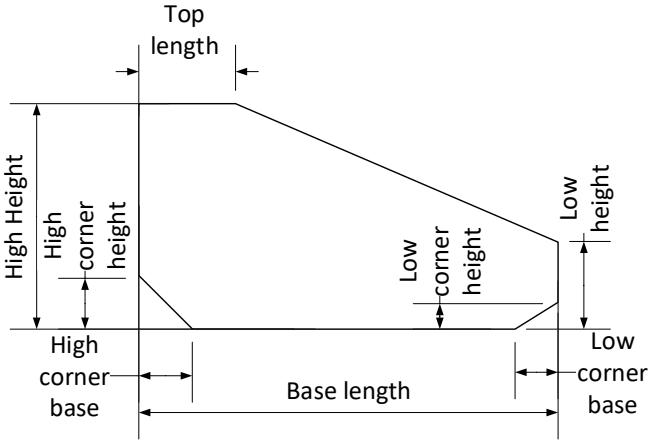

Shape code	Code	Item	Material	Comments	Base length [mm]	High height [mm]	Top length [mm]	Low Height [mm]	High corner height [mm]	High corner base [mm]	High corner base [mm]	High corner base [mm]	WT [mm]	Welds [m]	Area [m^2]	Volume [cm^3]
S-015001	003030	SAWB Mounting flange external gussets	S355JR	Low corner base - rectangular slot	347	163	40	90	40	40	40	40	10	0.45	0.04	442.56
S-015002	005008	TNBC Octagon Internal Gusset	S355JR	None	280	280	40	40	10	10	10	10	10	0.53	0.05	495.00
S-015003	009005	PFI Outlet flange - Gusset	S355JR	None	120	90	10	10	25	25	25	25	10	0.16	0.01	60.88

Shape code	Code	Item	Material	Comments	Base length [mm]	High height [mm]	Top length [mm]	Low Height [mm]	High corner height [mm]	High corner base [mm]	High corner base [mm]	High corner base [mm]	WT [mm]	Welds [m]	Area [m^2]	Volume [cm^3]
S-015004	010002	PF Burner centralising plate for core air	SS310	None	250	160	180	100	0	0	0	0	10	0.25	0.04	379.00
S-015005	010030	PF Burner inlet flange gusset - large	16Mo3	None	115	70	29	25	10	10	10	10	10	0.13	0.01	60.65
S-015006	010031	PF Burner inlet flange gusset - small	16Mo3	Angled high height to align with PF burner inlet sides	110	70	30	25	10	10	10	10	10	0.16	0.01	58.50
S-015007	010041	PF Burner Cone external gusset to mounting flange	S355JR	None	150	241.5	0	91.5	0	0	0	0	10	0.36	0.02	249.75
S-015008	016006	FSMF Gusset	S355JR	None	168	92	12	50.2	12	12	12	12	10	0.26	0.01	120.52

Shape number 16
Shape type: Pipe

Shape code	Code	Item	Material	Comments	OD [mm]	Length [mm]	Nominal diameter [mm]	Schedule [-]	WT [mm]	Welds [m]	Area [m^2]	Volume [cm^3]
S-016001	003031	SAWB Inlet Internal stiffener Left	S355JR	None	114.3	1480	100	Standard (40)	6	0.36	0.53	3021.28
S-016002	003033	SAWB Inlet Internal stiffener Centre	S355JR	None	114.3	1480	100	Standard (40)	6	0.36	0.53	3021.28
S-016003	003035	SAWB Inlet Internal stiffener Right	S355JR	None	114.3	1480	100	Standard (40)	6	0.36	0.53	3021.28
S-016004	007003	SASE flange distance piece pipe	S355JR	None	114.3	1584	65	Standard (40)	5.16	0.23	0.36	1741.97
S-016005	010033	PF Burner swirler gland cover pipe	16Mo3	Slot cut to adjust gland follower	114.3	185	100	Standard (40)	6	0.36	0.07	377.66
S-016006	013013	CAD Vane Sleeve	S355JR	None	114.3	815	32	Standard (40)	3.56	0.13	0.11	352.20
S-016007	016004	FSMF centre guide pipe	S355JR	WT change for standard pipe size, drawing schedule 20, 6.35 WT	114.3	375	200	Standard (40)	8.18	0.69	0.26	2032.60
S-016008	016008	FSMF flame scanner pipe	16Mo3	None	114.3	170	40	Standard (40)	3.68	0.15	0.03	87.70
S-016009	016012	FSMF inspection pipe	16Mo3	None	114.3	270	50	Standard (40)	3.91	0.19	0.05	187.02

Shape code	Code	Item	Material	Comments	OD [mm]	Length [mm]	Nominal diameter [mm]	Schedule [-]	WT [mm]	Welds [m]	Area [m^2]	Volume [cm^3]
S-016010	017001	FOS Tube	S355JR	Drawign deviation for standard pipe size, drawing OD 177.8 with 6.3 mm WT	114.3	4324	150	Standard (40)	7.11	0.53	2.29	15568.37
S-016011	018001	CT Oil lance	S355JR	None	114.3	4677	50	Standard (40)	3.91	0.19	0.89	3239.64
S-016012	018003	CT Ignitor lance	S355JR	None	114.3	4377	40	Standard (40)	3.68	0.15	0.66	2257.90

Shape number 17
Shape type: Cone

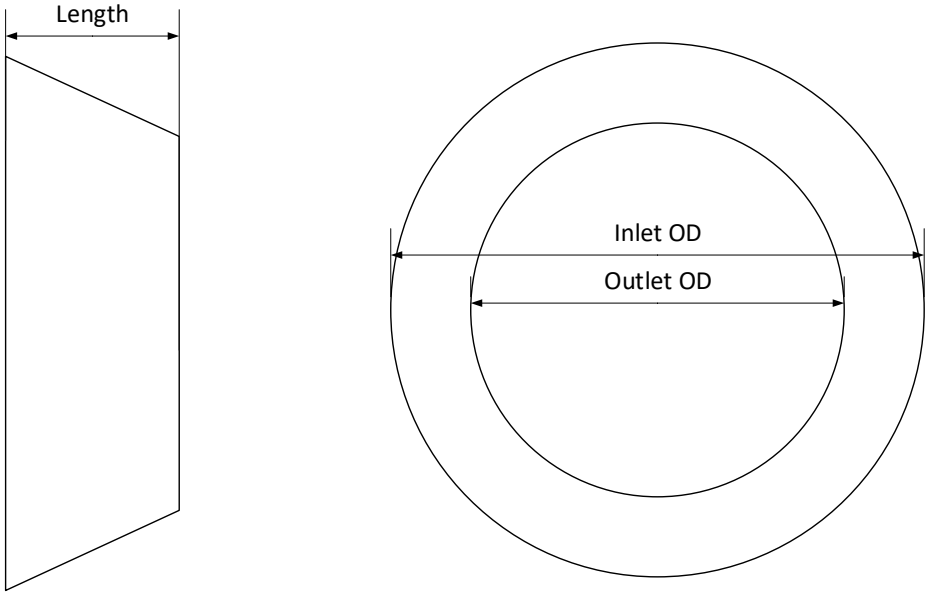

Shape code	Code	Item	Material	Comments	Outlet OD [mm]	Outlet OD [mm]	Outlet OD [mm]	degrees [°]	WT [mm]	Welds [m]	Area [m^2]	Volume [cm^3]
S-017001	004002	SAC Cone	S355JR	None	1520	1520	1520	360	10	6.08	2.21	22100.96
S-017002	008001	SASI cone	S355JR	None	1520	1520	1520	360	10	5.94	1.97	19694.11
S-017003	010009	PF burner top liner backing cone	16Mo3	None	1065	1065	1065	220	10	3.12	0.70	7006.06
S-017004	010010	PF burner bottom cone	16Mo3	None	945	945	945	140	10	1.95	0.40	4037.47

Shape number 18
Shape type: Refractory

Shape code	Code	Item	Material	Volume [m^3]
S-018001	004007	SAC mounting flange refractory	Refractory	0.067
S-018002	005014	TNB internal, tube external refractory	Refractory	2.373
S-018003	016015	FSMF refractory	Refractory	0.021

Shape number 19
Shape type: Machined components

Shape code	Code	Item	Material	Welds [m]
S-019001	007002	SASE flange distance piece rear reinforcement tube	S355JR	0.702
S-019002	010035	PF Burner swirler gland - female	16Mo3	0.165
S-019003	010036	PF Burner swirler gland - male	16Mo3	None
S-019004	013008	CAD Gland follower Female	S355JR	0.154
S-019005	013009	CAD Gland follower - Male (DE - holed)	S355JR	None
S-019006	013010	CAD Gland follower - Male (NDE - blind	S355JR	None
S-019007	016005	FSMF centre pipe gland follower female	16Mo3	0.723
S-019008	016007	FSMF centre pipe inner alignment ring	S355JR	0.635
S-019009	016011	FSMF flame scanner pipe end cap	16Mo3	None
S-019010	016013	FSMF inspection pipe reducer with external thread	16Mo3	0.188
S-019011	016014	FSMF inspection pipe end cap with view glass	16Mo3	None
S-019012	017007	FOS Gland follower male	16Mo3	None
S-019013	017008	FOS ventilating flange	16Mo3	0.534

Shape number 20
Shape type: Plate - vane

Shape code	Code	Item	Material	Comments	Inner ID [mm]	Outer Inlet ID [mm]	Outer Outlet ID [mm]	Vane angle / curve [°]	Inlet angle ref to radial line [°]	Outlet angle ref to radial line [°]	Casing length [mm]
S-020001	008011	SASI Vane	S355JR	Very basic calculation, Contractor responsible to develop full detail drawing for manufacturing.	1100	1467	1055	30	30	0	200
S-020002	017003	FOS swirler vanes	SS310	Very basic calculation, Contractor responsible to develop full detail drawing for manufacturing.	177	368	368	50	0	30	100

Shape 20 continue

Shape code	Code	Item	Inlet casing distance to vane [mm]	Outlet vane distance to casing [mm]	Inlet bend radius [mm]	Bend radius length [mm]	Angled length [mm]	WT [mm]	Welds [m]	Area [m^2]	Volume [cm^3]
S-020001	008011	SASI Vane	10	0	175	183.26	118.36	5	0.32	0.06	276.73
S-020002	017003	FOS swirler vanes	10	0	45	31.42	86.39	3.5	0.24	0.01	39.38

Shape number 21
Shape type: Round to square

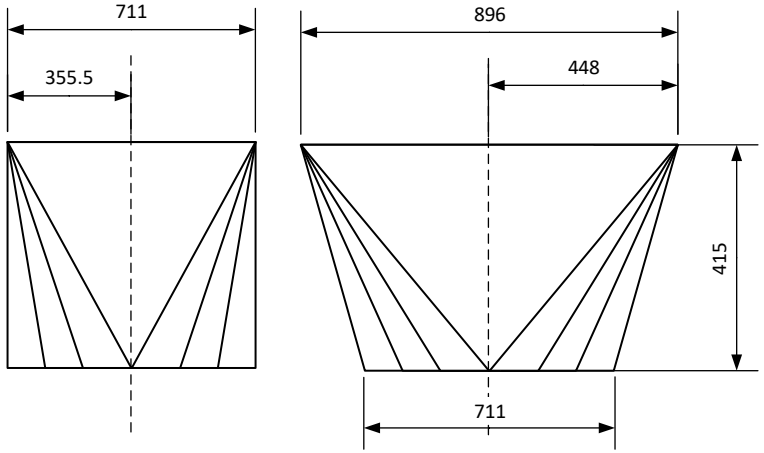

Shape code	Code	Item	Material	Bend direction [mm]	Outlet long base [mm]	Outlet short base [mm]	WT [mm]	Welds [m]	Area [m^2]	Volume [m^3]
S-021001	009006	PFI inlet round to square - Left front corner	S355JR	Downwards	896	711	12	2.20	0.29	3.52
S-021002	009007	PFI inlet round to square - Right front corner	S355JR	Upwards	896	711	12	2.20	0.29	3.52
S-021003	009008	PFI inlet round to square - Left rear corner	S355JR	Downwards	896	711	12	2.20	0.29	3.52
S-021004	009009	PFI inlet round to square - Right rear corner	S355JR	Upwards	896	711	12	2.20	0.29	3.52

Shape number 22
Shape type: Liners

Shape code	Code	Item	Material
S-022001	011001	PF liners Row A	VRN 400
S-022002	011003	PF liners Row A - Suite/sweet/filler cap	VRN 400
S-022003	011004	PF liners Row B	VRN 400
S-022004	011005	PF liners Row C	VRN 400
S-022005	011006	PF liners Row D	VRN 400
S-022006	011008	PF liners Row D - Suite/sweet/filler cap	VRN 400
S-022007	011009	PF liners Row E	VRN 400

Shape number 23
Shape type: Square Liners

Shape code	Code	Item	Material
S-023001	011010	PF liner Row FL	VRN 400
S-023002	011011	PF liner Row FR	VRN 400
S-023003	011012	PF liner Row GL	VRN 400
S-023004	011013	PF liner Row GR	VRN 400
S-023005	011014	PF liner Row HL	VRN 400
S-023006	011015	PF liner Row HR	VRN 400

Inputs - QTY	Type QTY
Man Power - Weekdays	1200
Man Power - Saturdays	840
Man Power - Sunday/public holidays	600

No.	Task grade	QTY per task grade	Normal day rate	Overtime normal and Saturday rate	Sunday and Public holiday rate
1	Site manager	1	1200	840	600
2	Supervisor fitting / boiler making	1	1200	840	600
3	Supervisor welding	1	1200	840	600
4	Quality Controller	1	1200	840	600
5	Planner	1	1200	840	600
6	Fitter	4	4800	3360	2400
7	Welder	4	4800	3360	2400
8	Welder Assistant	4	4800	3360	2400
9	Boilermaker	4	4800	3360	2400
10	Boilermaker Assistant	4	4800	3360	2400
11	Semiskilled	4	4800	3360	2400
12	Rigger	2	2400	1680	1200
13	Rigger Assistant	2	2400	1680	1200
14	Safety Officer	1	1200	840	600
15	Store man	1	1200	840	600

SCOPE OF WORK PREPRATION WORK

- Make up complete 24 PF tips and tubes as per drawing(No:061/2207)
- Make up complete 24 core air tips as per drawing (No: 061/2207).
- Cut and roll 24 protection sleeves (No: 061/2207).

- Cut, roll and install steel sheets according to drawing No061/2207 24 rear angles casing.

REFURBSHIMENT

NOTE: The initial refurbishment scope of work it shall be provided 5days after inspection of: Wind box, PF pipes, square to round and core air (tube, sleeve and tip

Welding requirements:

- Company must be ISO 3834 Part 2 certified.
- All welding to be done according to Eskom welding standard 240-56241933 Control of Plant Construction, Repair and Maintenance Welding Activities
- All welding should be done according to approved EN BS ISO welding procedures. Submit welding procedures for approval by Eskom and the Third party Inspection Authority before starting with any welding.
- All welding should be done by qualified ISO welders. Submit welder names with qualifications for approval by Eskom and the Third party Inspection Authority before starting with any welding.
- All welding to be done as per approved ITP's (Inspection and test plans).

An Approved Hardcopy and softcopy data book must be delivered to Eskom on completion of the project and should as a minimum contain the following:

- Approved scope of work
- Approved repair instructions/recommendations
- Approved and signed off QCP's
- Welding procedures and welder qualification records
- Material & electrodes certificates
- Updated drawing can be used as weld map.
- NDT reports
- Final release certificate (COC)

1.2 *Employer*'s requirements for the *service*

1.2.1General

- All work undertaken must be done in accordance with workflow service and other things provided by the Employer
- The contractor will familiarize himself with the plant and the dangers/hazards or obstacles in the vicinity, as Eskom will not be liable for any occurrence that can lead to a compensation event.
- Work Permit Risk Assessment From must be completed before each task.
- Application for isolating Permit must be requested at least one day in advance.
- The *Contractor* must provide proof of experience and Qualifications of all personnel.
- All tools and equipment must be inspected regularly and filed as per the SHEQ requirements
- All Assessments must be signed off by both *Contractor* and *Services Manager*
- The *Service Manager* will verify that work performed as per Assessment is in fact a true reflection of work performed. Support documentation will be required from the *Contractor*.
- All PPE to be provided by *Contractor* and must be SABS approved and according to Eskom standards
- Good housekeeping at all times. The *Contractor* must clean and remove all debris after completing a task.
- When entering the site after hours and if the person is without an Eskom identification card the entrance register must be filled in at Main entrance gates.
- All services must be done according to the Eskom standards and procedures.
- Delay damages /Standing time impacting on the return to service caused by the *Contractor* greater than 3 hours of the duration will be penalised 10%of the total order price.
- The first two hours on site will not be seen as waiting time and will be free of charge.

- ALL equipment calibrated and kept in good working order Certificates must be handed in to *Service Manager*
- If the *Contractor* replaces personnel under his control.it must be approved by the *Service Manager.*
- *Contractor* to provide plan on how his personnel will be divided to attend training and go on leave.
- All new staff to be appointed in writing.
- All new staff to do induction training.
- All new staff to be approved by the *Service Manager* before entering the site or commencing work.
- All new staff hand in all qualifications and relevant documentation to *Services Manager*.
- All overtime worked must comply with Eskom rest period requirements.
- All planned overtime a plan must be submitted by the *Contractor* and a request for planned overtime to be handed in and approved by site *Services Manager*
- Any incident leading to standing time must be corresponded within one hour *Service Manager*; this includes the names of the people affected. Standing time will be paid for normal time only. If the occurs during over time it will result in the end of that shift.
- No work shall commence until the Scope of Wok has been finalized and accepted by both the *Service Manager* and *Contractor*.

1.2.2 Special Requests

- Risk assessments must be completed before each task.
- Eskom Lifesaving rules to be adhered to
- Eskom safety meetings and regulations to be adhered to
- Will comply within Eskom QC Standards
- Will comply within Eskom (WWM)work week management system
- The contractor will be authorized in Eskom (PSR) Plant Safety Regulations permit within 6 months
- Good housekeeping to be maintained at all times
- All telephone accounts on Contractors account
- All cabins and LV equipment will comply within the Eskom standards(COC)
- Site condition will be according to the Eskom and Safety regulations standards
- Quality control plan and contract quality plan approval process standards as per QM58 to be used
- Audit on Contractor will be done on frequent basis
- Contractor to make use of Eskom ablution facilities
- Transport to be provided by contractor
- Eskom Transport procedures to be adhered to
- Safety (Zero harm policy)
- Contractor staff to be Authorised and found competent in writing to work at Heights.
- All work done under a Plant safety permit to work at all times.

1.2.3 <u>Quality requirements</u>:

- All inspection and test plans (ITP's) / quality control plans (QCP's) to be approved by Eskom, Third Party Inspection Authority and the Contractor have to accept the ITP before any work may commence.
- Contractors responsibility to inform the Plant Engineer or his representative at the daily progress meetings when an activity will be ready for QC.

- All work to be done according to an approved ITP. Adhere to hold points, Witness points and Surveillance points.
- All new materials to be delivered with material certificates.

1.2.3 <u>Scaffolding</u>:

- Eskom will provide all scaffolding requirements.
- The scaffolding requirements must be provide two weeks prior to the outage to the Service Manager.
- Daily requirements will be discussed at the daily feedback meeting and scaffolding requirements should be handed over to Eskom in writing.

1.2.4 <u>Electrical and C&I cabling:</u>

- The removal and connecting of the electrical and C&I cables will be the responsibility of Eskom.

Note: Eskom quality inspector will carry out inspection to all 24 burners, recommendations /cutting will be issued and it shall be taken as initial scope of work. To be evaluated as technical acceptable to do the PF burner repairs you need to hand in the following with your tender document. **Welding procedures for all different materials as indicated on the scope, Repair QCP's and Works instructions (repairs procedures) .Generate the program with the scope of work given below and indicate the starting date and completion date of the activities.**

Inspect floor plates as per design drawings.

Requirements:

- Use the approved design drawing from Eskom Engineering.
- Conform to welding requirements as stated in the works information.

Conform to Quality requirements as stated in the works information.

1.3 Interpretation and terminology

The following abbreviations are used in this Service Information:

Abbreviation	Meaning given to the abbreviation
B-BBEE	Broad Based Black Economic Empowerment
PPPFA	Preferential Procurement Policy Framework Act
CPA	Cost Price Adjustment
AP	Accounts Payable
OHSACT	Occupational Health and Safety Act 85 of 1993
SOW	Scope of Work
PPE	Personal Protection Equipment
SAP	System Application Products
PSR	Plant Safety Regulations
LV	Low Voltage
HV	High Voltage
RP	Responsible Person
LAR	Local Access Register
QCP	Quality Control Plan
ISO	International Organization for Standardization
QMS	Quality Management Systems
QC	Quality Control
NDT	Non-destructive Testing
COC	Certificate of Compliance
VAC	Voltage Alternating Current
OHS Act	Occupational Health and Safety Act.

QCP	Quality Control Plan
QA	Quality assurance
QC	Quality Control
SANS	South African National Standard
ITP	Inspection Test Plan
SSC	Submersible Scraper Conveyor.
NDT	None Destructive Testing
TUV	Third Party Inspection Authority

2 Management strategy and start up.

2.1 The *Contractor*'s plan for the *service*

- The Contractor shall execute scope as per Eskom Bar-chart or Network and can be changed on short notice.

2.2 Management meetings

- The Contractor Supervisor will attend the daily Co-ordinators meeting as well the Outage meeting as and when required by Outage Manager.
-

Regular meetings of a general nature may be convened and chaired by the *Supply Manager* as follows:

Title and purpose	Approximate time & interval	Location	Attendance by:
Risk register and compensation events	Weekly on _____ at ___		
Overall contract progress and feedback	Monthly on _____ at ___		*Employer*, *Contractor* and ___

Meetings of a specialist nature may be convened as specified elsewhere in this Service Information or if not so specified by persons and at times and locations to suit the Parties, the nature and the progress of the *service*. Records of these meetings shall be submitted to the *Service Manager* by the person convening the meeting within five days of the meeting.

All meetings shall be recorded using minutes or a register prepared and circulated by the person who convened the meeting. Such minutes or register shall not be used for the purpose of confirming actions or instructions under the contract as these shall be done separately by the person identified in the *conditions of contract* to carry out such actions or instructions.

Contractor site manager to attend the following meetings:

1. Daily progress feedback meeting.
2. Daily permit meeting.
3. Contractor safety meeting.
4. AD-Hoc meeting.

2.3 *Contractor*'s management, supervision and key people

- The Contractor will submit an organogram within one week with full detail, including Police Clearance on the Supervisor, Artisans, Semi-Skilled staff and Safety officer.
- The qualifications of all staff to be submitted and will be evaluated, and Eskom can sanction.
- Supervisor : to be authorised as RP for Plant safety regulations
- Artisan to be authorised as according to plant safety regulation, training will be provided by Eskom.
- Labourers for the removal and replacement of safety and control valves

2.4 Provision of bonds and guarantees

The form in which a bond or guarantee required by the *conditions of contract* (if any) is to be provided by the *Contractor* is given in Part 1 Agreements and Contract Data, document C1.3, Sureties.

The *Employer* may withhold payment of amounts due to the *Contractor* until the bond or guarantee required in terms of this contract has been received and accepted by the person notified to the *Contractor* by the *Service Manager* to receive and accept such bond or guarantee. Such withholding of payment due to the *Contractor* does not affect the *Employer*'s right to termination stated in this contract.

2.5 Documentation control

- The Contractor will be given a logic network or bar-chart indicating scope execution during outage, this will and can be changed by Eskom as required.
- Each instruction, certificates, submission, proposal, record, acceptance, notification, reply and other communication which this contract requires is communicated in a form which can be read, copied and recorded.
- Writing is in the *language of this contract*.
- Monthly and weekly reports to be discussed compiled and handed in to the Eskom Supervisor and *Service Manager*.
- All communications must be printed and filed in the *Service Managers* file.

2.6 Invoicing and payment

The Contractor will monthly submit an Assessment with Invoice that Eskom will process for payment.

- Within one week of receiving a payment certificate from the *Service Manager* in terms of core clause 51.1, the *Contractor* provides the *Employer* with a tax invoice showing the amount due for payment equal to that stated in the *Service Manager's* payment certificate.

- The *Contractor* shall address the tax invoice to

  Eskom Holdings SOC Limited
  Tutuka Power Station
  Private bag X2016
  STANDERTON
  2430

  _____

  And include on each invoice the following information:

  - N*ame and address of the Contractor and the Service Manager;*
  - The contract number and title;
  - *Contractor*'s VAT registration number;
  - The *Employer*'s VAT registration number 4740101508;
  - Description of *service* provided for each item invoiced based on the Price List;
  - Total amount invoiced excluding VAT, the VAT and the invoiced amount including VAT;
  - Purchase Order number;

- CPA calculation sheet;
- Copy of Assessment with Service Entry number.

- Invoices must be handed directly to Tutuka Power Station's AP.

)

2.7 Contract change management

- Changing the Service Information
- Access
- Provision by the *Employer*
- Stopping work
- Work of the *Employer* or others
- Reply to communication
- Changing a decision
- Withholding acceptance
- Delayed tests or inspections
- Change of Affected property
- Materials, facilities, etc. for tests
- *Employer's* risks
- Assumption about Compensation Events
- *Employer's* breach of contract

2.8 Records of Defined Cost to be kept by the *Contractor*

- Not applicable.

2.9 Insurance provided by the *Employer*

First read TSC3 Core Clause 86.1 and then add anything necessary for the management of insurance related issues such as a cross reference to where procedures for making claims can be found. Also provide contact details for persons capable of being able to answer any insurance related queries the *Contractor* may have, as well as to whom the information required by Marine Insurance (if any) may be addressed.

2.10 Training workshops and technology transfer

- Not applicable.

2.11 Design and supply of Equipment

- In the case for a modification, the Modification process must be followed.

2.12 Things provided at the end of the *service period* for the *Employer*'s use

2.12.1 Equipment

- Contractor will provide all equipment (e.g. blowers, drills, lead lights, etc.) required to execute scope.
  Crane & Mobile machinery:
- Contractor will provide and be responsible for any lifting machinery that will be required to undertake the work. (Fork lift or mobile machine e.g.)

2.12.2 Information and other things

Other Activities:

- Take note that you will not be the only contractor working on the outage and your program should accommodate other activities in your area.
- Before you may commence with your work boiler washing needs to be done.
- Water from the Iris Test at the economizer might delay your work inside and around.
- Submit your program and cost to accommodate the other activities.
- All reports/documents to be compiled, filed, discussed and handed over to the *Employer* on a weekly basis and at the end of the *service.*
- The *Contractors* safety file will be hand over to the *Service Manager* and will be saved for 40 Years after completion / termination of the contract

2.13 Management of work done by Task Order

- Contractor will be given a Task Order a month before the Outage on Scope execution.
- The Task Order will include the 45* order number.
- A Task Order / Purchase Order are the instruction to commence work.
- No work shall commence until Task Order / Purchase Order is issued and has been finalised and accepted and signed by both the *Employer* and *Contractor.*
- Completion certificate to be issued after tasks is completed on the Task Order. Completion certificate must be submitted together with the Assessment.
- All work will be issued on a Task Order system. The Work Order, Purchase Requisition and Purchase Order will be created via the SAP PM system.

2.14 Environmental constraints and management

- Not applicable.

The *Contractor* shall comply with the environmental criteria and constraints stated in Annexure _____

2.15 Quality assurance requirements

- **The Contractor will submit a Quality Plan** and **Safe Work Procedures** with a reference of the last three years contracts, including contact person detail on scope execution as required on this contract.

3 Health and safety, the environment and quality assurance

3.1 Health and safety risk management

The *Contractor* shall comply with the health and safety requirements contained in Annexure SHE Specification 14RISK SRM – 084 to this Service Information.

SHEQ Policy

Eskom SHEQ Policy

Eskom has made a commitment to conduct business with respect and care for people, the environment and assets and that no operating condition or urgency of service justifies exposing anyone to negative risks arising from Eskom's business.

Compliance with the Eskom SHEQ Policy and applicable regulations is the responsibility of every employee and contractor.

Contractor SHEQ Policy

All contractors shall have an OHS policy signed by the CEO of the contractor and prominently displayed where employees normally report for duty.

Signed copy of the OHS policy shall form part of the SHE file.

SHE PLAN REQUIREMENTS:-

- Principal contractors shall develop a suitable and sufficiently documented site specific SHE plan, based on the scope of work and client SHEQ specification.
- The SHE plan must be pre-approved by the client for implementation. The principal contractor/contractor has a responsibility to send the SHE plan to the client for approval prior to commencement of work.
- The SHE plan must be applied from the commencement of and for the duration the construction work, which must be updated/reviewed as the work progresses/changes.

When a principal contractor intends appointing contractor, the principal contractor shall ensure that the contractor provides and demonstrate a suitable, sufficiently documented and coherent site specific health and safety plan, based on the client's SHEQ specifications and scope of work

3.1.1 Health and Safety Arrangements

The *Contractor* ensures that all his personnel attend a Health and Safety Induction Course prior to contract starting date, and annual re- induction. The Induction Course is presented by the *Employer's* Safety Risk Department at Tutuka Power Station. Arrangements are made with Safety Risk Management, by the *Contractor.*

The *Employer's* Safety Risk Manager visits and inspects the *Contractor's* workplace or site yard and the working areas to ensure that tools; machinery and Equipment comply with the minimum safety requirements.

The *Service Manager* may instruct the *Contractor* to stop work, where the *Contractor's* personnel fail to conform to safety standards or contravene health and safety regulations. Such stop-work order is not a compensation event. The *Service Manager* may instruct the *Contractor* to discipline his employees and to submit a disciplinary action report to the *Service Manager*. The *Contractor* implements additional health and safety precautions where necessary.

Health and safety

The *Contractor* complies with the Occupational Health and Safety Act 85 of 1993, as well as Eskom procedure as stipulated below:

- SHEQ Policy 32-727
- Eskom Procurement and Supply Chain Management Procedure 32-1034
- SHE Requirements for the Eskom Commercial Process 32-726
- *Contractor* Health and Safety Requirements 32-136
- Integrated SHE Organization; Roles and Responsibilities and Statutory Appointments 32- 296
- Live-saving Rules 240-62196227
- Working at Heights 32-418
- Eskom Vehicle Safety Specifications 32-345
- Tutuka *Contractor* SHEQ Specifications 14RISK SRM - 084

The *Contractor* acknowledges that it is fully aware of the requirements of all the above and undertakes to employ only people who have been duly authorised in terms thereof and who have received sufficient safety training to ensure that they can comply therewith.

The *Contractor* undertakes not to do, or not to allow anything to be done which will contravene any of the provisions of the Act, Regulations or Safety and Operating Procedures.

The *Contractor* shall appoint a person who will liaise with the Eskom Safety Officer responsible for the premises relevant to this contract.

Do safety audits at the *Contractor's* premises, its work-places and on its employees;

Refuse any employee, sub-Contractor or agent of the *Contractor* access to its premises if such person has been found to commit any unlawful act or any unsafe working practice or is found to be not authorised or qualifies in terms of the OHSACT;

Issue the *Contractor* with a work stop order or a compliance order should Eskom become aware of any unsafe working procedures or conditions or any non-compliance with the Act, Regulations and Procedures by the *Contractor* or any of its employees, sub-Contractors or agents.

The *Contractors* Health and safety file is to be submitted for approval to Tutuka's Safety Officer before contract commencement.

All work stoppages called by the *Employer* to be adhered to

3.1.2 First aid and fire fighting

Adequate first aid and firefighting equipment to be provided by the *Employer*
All *Contractor* personnel must have First aid and firefighting training

3.1.3 Fire Precautions

Any tampering with the *Employer's* fire equipment is strictly forbidden.

All exit doors, fire escape routes, walkways, stairways, stair landings and access to electrical distribution boards is kept free of obstruction, and are not used for work or storage at any time. Firefighting equipment must remain accessible at all times.

The *Contractor* takes the necessary action to safe guard the area to prevent injury and the spreading of the fire.

3.1.4 Security, fire protection and safety

The *Contractor* shall be responsible for ensuring the security of the works, and of his plant, equipment and materials. To that end he shall make adequate provision for access control, lighting and watchman to the works where required.

3.1.5 Fire protection

The provision of Eskom's standard NWS 1494 "Fire Prevention and Protection of *Contractor's* premises at New Works sites" shall be applicable.

3.1.6 Safety and incident prevention

The *Contractor* shall implement and maintain an active Site Safety and Accident Prevention Programme in accordance with the Tutuka SHEQ Specifications. The overriding regulations will however be the Occupational Health and Safety Act.

3.1.7 Reporting of accidents

The *Employer* follows an accident prevention policy that includes the investigation of all accidents involving personnel and property. This is done with the intention of introducing control measures to prevent a recurrence of the same incidents. The *Contractor* is expected to fully co-operate to achieve this objective. The *Service Manager* must be informed immediately of any incidents. A written report to be submitted to the *Employer within 24 Hours* of incidents and any damage to property or equipment

NOTE! This report does not relieve the *Contractor* of his legal obligations to report certain incidents to the Department of Labour, or to keep records in terms of the Occupational Health and Safety Act, and Compensation for Occupational Injuries and Diseases Act.

3.1.8 Occupational Health and Safety Act 85 0f 1993 – SECTION 37

In accordance with Section 37 (2) of the Act, the *Contractor* is appointed by the *Employer* as mandatory to assume Health and Safety duties and responsibilities. The *Contractor* ensures compliance with all requirements of the Act and any instruction or notification that enhances those requirements.

The *Contractor* acknowledges that he is fully aware of all the requirements of the Occupational Health and Safety Act and undertakes to employ only staff who have been duly authorised in terms thereof and who receive sufficient safety training to ensure that they can comply therewith.

The *Contractor* undertakes not to do, and not to allow anything to be done which will contravene any of the provisions of the Act, Regulations or Safety and Operating Procedures.

3.1.9 The *Contractor* appoints a person who liaises with the *Employer's* Safety Officer, responsible for the premises relevant to the Contract. The person appointed shall on request:

- Supply the *Employer's* Safety Officer with copies of minutes of all Health and Safety Committee meetings, whenever required.
- Supply the *Employer's* Safety Officer with copies of all appointments in respect of employees employed on this contract, in terms of the Act and Regulations and shall notify the *Employer's* Safety Officer of any changes thereto.

The *Employer* may, at any stage during the duration of this contract:

- perform safety audits at the *Contractor's* premises, its work place and its employees;
- refuse any employee, *Subcontractor* or agent of the *Contractor* access to its premises if such person is found to commit any unsafe act or any unsafe working practice or is found not to be duly authorised nor qualified in terms of the Act;
- Issue the *Contractor* with an instruction to stop work should the *Employer* become aware of any unsafe working procedure or condition or any non - compliance with the Act, Regulations and Procedures referred to in the Occupational Health and Safety Act - 85 of 1993 and all Regulations made hereunder as well as all the *Employer's* Safety and Operating Procedures. Any such instruction is not a compensation event. Furthermore, no amendments to the act or the Regulations or reasonable amendment to the *Employer's* Safety and Operating Procedures will entitle the *Contractor* to claim any additional costs or time incurred in complying therewith, from the *Employer*

3.1.10 Safety Regulations of the *Employer*

The *Contractor* conforms to the Eskom Plant Safety Regulations
The *Employer* makes available to the *Contractor*, on request, a copy of the latest revision of the Plant Safety Regulations.

3.1.11 Health and safety

The *Contractor* complies with the Occupational Health and Safety Act 85 of 1993.

3.1.12 **Safety**

- The contractor shall conduct a safety inspection and hold a meeting with all employees once per month.
- The minutes of the meeting must be handed in to Eskom not later than the 4th last working day of the current month.
- The contractor is responsible to ensure the safety of all employees as far as practicable without risk to their health.
- The contractor must provide Eskom with a report of each employee's yearly medical screening every year.
- The contractor is responsible to report all safety deficiencies to Eskom immediately for action.
- The Contractor must attend the monthly Main Safety meeting representing his company
- The site supervisor must keep the companies Contractors Safety File updated and hand it in for Auditing purposes on a quarterly basis.

- **Safety Equipment**

  - Appropriate safety equipment such as a self-contained breathing apparatus, life buoys and lifelines shall be made available by the Employer's Representative at a relevant places at the plant, e.g. chlorine house, etc. The Contractor will be responsible for maintenance of this safety equipment.
  - The Employer shall initially provide all exposed moving parts of machinery with safety guards. These guards shall be maintained and repaired by the employer.
  - The Contractor shall train his employees at the plants in the use of safety equipment.
  - No employee shall be allowed to work unaccompanied at and/or on potentially dangerous equipment and areas, e.g. chlorinating equipment / house, etc.
  - The contractor shall hold at least once a month a safety meeting and keep records thereof for perusal by the asset owner as and when required. The meeting will also include a work team discussion and a discussion regarding IBI. The employer will attend the meeting as and when required to ensure effective implementation of the program. Date list to be provided to the employer by the contractor.
  - The contractor is required to attend the station's main safety meeting which is held once a month and give feedback as required.
  - The minutes of the Safety and work team session meetings must be handed in to Eskom not later than the 1st working day of the next month.
  - The contractor is responsible to report all safety deficiencies to Eskom immediately for action.

3.2 Environmental constraints and management

The *Contractor* shall comply with the environmental criteria and constraints stated in the following:-

All waste from the project must be disposed in a sound environmental manner in accordance with Tutuka Power Station Waste Management Procedure 14 Risk ENV-013. Oil spillages must be contained and cleaned as per Oil Spill Management procedure 15 ENPRENV-001. The project must conform to Eskom Environmental Legal and other Requirements procedure 14 Risk ENV-012 and the project must conform to Tutuka Power Station ISO14001 Standard with reference to Tutuka Power Station's Environmental Management System Manual 14 Risk ENV-010. All environmental incidents must be dealt with as per the Station's Incident Management, Corrective and Preventative Procedure 14 Risk PC-001 and all environmental incidents must be reported to the Environmental Department on site with Telephone Number 017-7495536/9231.

3.3 Quality assurance requirements

The *Contractor* shall be required to demonstrate by means of a Quality Plan that this organisation is so structured that all the requirements of the specification will be properly monitored and controlled. The Quality Plan and Control procedures are to be carried out in accordance with QM 58. The Quality Control

document is to be submitted for approval to Tutuka within three (3) days after order placement by the *Contractor*.

No work may commence unless the Quality Control document has been approved in writing and a copy submitted to *the Service Manager*. *The Contractor*, in conjunction with Tutuka Engineering must sign off all Quality Control documents after completing all work on site. *The Contractor* to submit a copy of the final signed off document to *the Service Manager* within 1 week after Completion of a Unit.

- ISO 9001:2008 - Quality Management Systems
- GGG 1099 - The guideline provides Fossil and Peaking Power Stations with information necessary to establish the classification of all plant systems, equipment, components and activities.
- QM 58 - Supplier Contract Quality Requirements Specification
- The *Contractor* must provide Quality Control Plan documents for approval by Eskom Supervisor prior performing any activity.

4 Procurement

- Eskom will provide all spares and material.

4.1 People

4.1.1 Minimum requirements of people employed

The *Contractor* to provide proof of 3 years' experience similar work performed.

- Artisans as per Qualified (Red Seal).
- Supervisor with 5 year scope experience on Burner repairs.
- Police Clearance on all staff.

4.1.2 BBBEE and preferencing scheme

- As per clause Z3 within Contract Data.

4.1.3 Accelerated Shared Growth Initiative – South Africa (ASGI-SA)

PPPFA STRATEGY

Indicate the percentage (%) that is allocated to:

Price	**90%**
BBBEE Status	**10%**
Designated commodity **(Yes/No)**	**Yes**

4.2 Subcontracting

4.2.1 Preferred subcontractors

Sub-*Contractors* will only be allowed with a written permission from the *Service Manager*

4.2.2 Subcontract documentation, and assessment of subcontract tenders

- N/A.

4.2.3 Limitations on subcontracting

- N/A

4.2.4 Attendance on subcontractors

- N/A

4.3 Plant and Materials

4.3.1 Specifications

- Where applicable: All plant spares and materials to be inspected (Quality checked) before installing at plant.
- Hold and witness points must be attended and witness all intervention points as per approved QCP as per activity.
- The *Contractor* is not allowed to use any materials or spares for private usage or on other Eskom sites.
- The *Contractor* must transport material from the stores to the plant.
- Requests to be in writing the day before the material will be needed.
- Work and QC do be done according to Eskom regulations and procedures

4.3.2 Correction of defects

- All work to be done must be done under a permit to work. Some plants are trip risks and can only be worked on during outages or units shut downs.
- All defected spares to be replaced with the permission of the *Service Manager*/Eskom Supervisor.
- All rework to be attended to within 24 hours and will be against the contractors costs
- Eskom holds the right to request the Contractor to execute re-work on maintenance done.
- There is hold points where the Contractor and scope execution will be witnessed.

4.3.3 *Contractor*'s procurement of Plant and Materials

- Purchasing of spares or materials will go through the Eskom procurement process.
- The *Contractor* will supply his own consumables (i.e. cleaning chemicals, cleaning rags, etc.).
- Eskom will provide all spares, material

4.3.4 Tests and inspections before delivery

- All spares removed and returned to Tutuka premises must be declared at the main entrance where the removal permit for the spares must be shown to the Protective Services personnel.

4.3.5 Plant & Materials provided "free issue" by the *Employer*

- **Eskom will provide all spares.**
- **Contractor to provide all Tools, Transport and equipment required to execute scope.**

5 Working on the Affected Property

- Contractor will adhere to all Eskom Regulations and Procedures.

5.1 *Employer*'s site entry and security control, permits, and site regulations

- The site is Tutuka Power Station unit 1 to 6 outage.
- Lifesaving rules must be adhered at all times.
- Access is limited and controlled by Plant Safety Regulations requirements.
- No employee will be allowed to access the plant or to work without access permit issued.
- All personnel to work on the plant must be registered on the Worker's Register by the Responsible Person.
- All personnel must attend induction before working on site and they must obtain gate permits via the *Service Manager*.
- Unauthorised access to site is prohibited. The personnel are expected to be at their working site area at all times.
- No recruitment on site or at the main access gates.

- All activities to comply with the OHSACT regulations.

- Contractor will provide all free of charge all documentation required to provide Security Permits, and on completion of Outage return these permits to Security. Failing to do this, the Contractor will refund Security as required.
- Contractor will adhere to all Eskom Regulations and Procedures.

5.2 People restrictions, hours of work, conduct and records

- Contractor will execute scope as per the
  - Labour Relations Act (L.L.R),
  - Basic Conditions Employment Act,
  - Eskom Procedures, on Transport and Road Ordinance,
  - Life-saving or Cardinal rules.
- Daily staff attendance document will be provided to Outage staff.
- If required, Work Stoppage will be attended by all staff and Attendance Register submitted.

- Working hours from 07:00 to 16:00 and Friday 07:00 to 12:00
- Timesheets to be logged and signed by *Service Manager* / Supervisor and the *Contractor* as proof for evacuation purposes.

.

5.3 Health and safety facilities on the Affected Property

- Proto-team on each shift
- Medical Station and relevant staff on Site.
- Each workshop has a first aid box available.
- Yearly induction for all personnel.
- In an emergency the contract supervisor and *Service Manager* must notified immediately
- Safety:-
  - Induction. must include the following:-
  - a) Housekeeping
  - b) Electrocution – Safety Requirements
  - c) Transportation
  - d) PPE
  - e) Confined Spaces
  - f) NDT – Non NDT personnel – Safety Requirements
  - g) Equipment
  - h) Other Arrangements –
    - # Hygiene
    - # Facilities as designated by the *Employer*
    - Toilets

First aid centre

The *Contractor* provides a first aid service to his employees and *Subcontractors*. In the case where these prove to be inadequate, like in the event of a serious injury,
the *Employer's* medical centre and facilities are available.

Outside the *Employer's* office hours, the *Employer's* first aid services are only available for serious injuries and life threatening situations.

The *Employer* is entitled, however, to recover the costs from the *Contractor* for the use of the above *Employer's* facilities

5.4 Environmental controls, fauna & flora

Environmental management

- Proper care of the natural environment is important to prevent nuisance and environmental degradation.
- All contractors shall comply with Eskom environmental management procedures and Environmental legislation
- Environmental incidents shall be reported to the Eskom Environmental Department as per incident management requirements.

Waste Management

- Waste segregation is important to facilitate recycling of waste. Ensure waste is disposed of in the correct colour bin.
- Eskom periodically collects waste from the bins for disposal in the correct manner.
- No waste should be burned or buried on site.
- Where Eskom and the contractor have agreed that the contractor is responsible for the disposal of its waste, the contractor shall safely dispose of such waste and keep disposal certificates on file.

Types and colours of bins used on site:

- *Yellow bin for domestic waste*
- *Orange bin for hazardous waste*
- *Maroon bin for scrap*
- *Green box for cartridges*
- *Blue box for recyclable paper*

Radiation protection

The *Contractor* conforms to the *Employer's* procedure OMOP 2049 and OMOP 2051 when performing any industrial radiography.

Hazardous Substances

It is required in terms of the General Administrative Regulation (Regulation 7) of the Act that any manufacturer, importer, seller or supplier of hazardous chemical substances shall supply the receiver, free of charge with sufficient information for the user, to enable the user to introduce the necessary measures as regards the protection of the health and safety of persons. It is therefore the responsibility of the supplier (dealing directly with the *Employer)* to supply the information. If information is not available for whatever reason, the supplier must indicate and give reasons to the *Employer.*

Environmental management

The *Contractor* is required to ensure that all goods, services or works supplied in terms of the contract conform to all applicable environmental legislation. Where work is done on the Site, the goods, services or works supplied will also conform to the *Employer's* environmental specifications.

Handling of waste produced by the Contractor

All waste introduced to and/or produced on the *Employer's* premises, by the *Contractor*, for this contract, must be handled in accordance with the minimum requirements for the Handling and Disposal of Hazardous Waste in terms of Government Legislation as proclaimed by the Department of Water Affairs and Forestry Act 1994 Ref.:BN0621-16296-5.

The *Contractor* is responsible to appoint a waste coordinator to ensure that all waste produced is handled according to the applicable legislation.

The *Contractor* is required to ensure that all goods, services or work supplied in terms of the contract conform to all applicable environmental legislation. Where work is done on the *Employer's* site, the goods, services or work supplied also conforms to the *Employer's* environmental specifications.

Waste from the cleaning and maintenance of equipment

The *Contractor* is responsible to contain all waste due to cleaning and maintenance of equipment and disposes of as described below.

Stockpiling of waste

Waste is removed promptly to the designated deposit areas. No stockpiling is permitted.

Hazardous waste

Waste declared as hazardous substances in terms of the Hazardous Substances Act no 15 of 1973 is the responsibility of the *Contractor* to ensure safe removal from the property to a registered Class 1 site

Pest Control

- Only approved herbicides with a low environmental risk shall be used for pest control.
- Only registered pest controllers may apply herbicides on a commercial basis.
- Application of herbicides shall be in accordance with the Fertilisers, Farm Feeds, Agricultural Remedies and Stock Remedies Act 36 of 194.

Water Conservation

- Incidents related to water pollution must be reported to the Eskom environmental department within 24 hours.
- Report/fix leaking taps and pipes to save water.
- Use water sparingly.
- Chemical substances shall not be disposed of in waste water or storm water drains.

Air Pollution

- Dust suppression measures must be in place to reduce airborne dust.
- Noxious and offensive odours arising from work activities shall be adequately controlled.

Ground Pollution

- Measures to prevent or control ground contamination shall be put in place e.g. drip trays, bund walls.

- Spill containment, clean-up and ground rehabilitation shall be done as per Tutuka Defective spares will be disposed of as per the Eskom Regulations.

5.5 Cooperating with and obtaining acceptance of Others

5.5.1 Interface with Others

It is likely that other *Contractors* will be working in the same area. Others might however from time to time require limited access to the same area in order to execute maintenance activities and the *Contractor* is to be accommodating in such instances.

5.5.2 Planning

Programmes are submitted in hard and electronic copy.

5.5.3 Monthly progress report

A monthly progress report will be submitted to the *Service Manager*

5.5.4 Completion

Signing of assessment, completion and records of QC documents and technical notification

5.5.5 Requirements for Completion

Completion is when the *Contractor* has done all the work, which the Service Information states he is to do by the Completion Date and has corrected notified Defects, which would have prevented the *Employer* from using the works.

The site is handed back to the *Employer* in a condition acceptable to the *Service Manager*.

- The Contractor will work with and co-operate with all other partners and /or authorities on Site, and show respect for People and all Plant and all Equipment.
-

5.6 Records of *Contractor*'s Equipment

Contractor's equipment (cell phones with cameras, computers, cameras, etc.) to be declared and signed in at security.
All test equipment must be calibrated and tested regularly and certificates must be handed in to the *Service Manager* for record keeping.

5.6.1 Electrical & Instrumentation equipment and appliances

Any electrical/instrumentation equipment or appliances used by the *Contractor* conforms to the applicable South African Safety Standards and is maintained in safe and proper working condition. The *Service Manager* has the right to stop the *Contractor's* use of any electrical/instrumentation equipment or appliance that in the *Service Manager's* opinion does not conform to the foregoing. The *Contractor* only employs skilled persons, certified in terms of the relevant acts.

Electrical equipment must be marked with a unique number, code or colour code for identification. If the equipment is found to be in an unsatisfactory condition or if insufficient maintenance has been carried out on the equipment then it will not be approved for use on Site.

5.6.2 Suitability of Equipment and Tools

All equipment and tools used to perform safety valves testing and setting be as stated in the Tutuka Power Station "Specification.

The Employer shall inspect all the equipment and tools before the start of work.

If any equipment or tool is found to be defective, the Contractor shall be required to immediately replace that equipment or tool, failure to which the Contractor may be asked to vacate site.

A lot of emphasis shall be placed on the operation and quality of work.

The Contractor's equipment is inspected by an authorised Eskom employee on arrival at the site.

The following documentation is required to accompany the equipment where applicable: copies of all test certificates and maintenance records.

- All Tools and Equipment will be signed in at Security before every Outage and signed out on completion of Outage at no cost to Eskom..

5.7 Equipment provided by the *Employer*

- Not applicable.

5.8 Site services and facilities

5.8.1 Provided by the *Employer*

- The *Employer* supplies 220 & 380 V AC power supply at existing points for the purpose of the works only. All installations or equipment complies with all relevant safety regulations and requirements. Failure to comply with the safety requirements may lead to immediate disconnection. Uninterrupted supply is not guaranteed and is not grounds for compensation events. The *Contractor* makes arrangements, at his own expense, to maintain continuity and quality of power supply.
- The *Employer* supplies portable water for the purpose of the works, at existing points and in reasonable quantities. Uninterrupted supply is not guaranteed and is not grounds for compensation events.
- *Employer* will provide facilities (such as toilets).
- Access to prearranged storage areas and facilities for material and components to be installed, material and components to be re-used and material and components to be stored.
- Mobile and Overhead cranes to be provided and operated by the Employer
- Specialised rigging equipment to be provided by the Employer
  Riggers and Crane driver for specialised rigging to be provided by the Employer
- Eskom will only provide a stand, Contractor to erect a cabin or workshop if required.
- Eskom will only provide water and Electricity to this building.

5.8.2 Provided by the *Contractor*

- *Contractor* to provide and ensure safe transportation services for all his *Contractors* and it must comply with 32-93 and 33-345 procedures.
- Access permits [Refer to procedure: Access Control at Eskom premises (32-1134)]
- *Contractor* to provide own (coffee, sugar, milk, tea, etc.)
- All computers and printers accessories needed to be provided by the *Contractor.*
- All PPE to be provided by *Contractor* required to perform work in SOW
- Provide SABS approved Safety harnesses as per Eskom Safety requirements.
- *Contractor* will provide a Method Statement to explain how the SOW will be executed and this must form part of the Tender returnable.
- The *Contractor* makes his own arrangements for accommodation and meals.
- The *Contractor* provides his own cell phone and the cost thereof.

- The *Contractor* will be responsible for all none Eskom telephone calls, faxes and internet usages.
- *Contractor* to provide 2 x (380VAC 63 Amp) 50m extensions. Extensions must be COC certified.
- *Contractor* to provide own Compressed air for the works where needed.
- *Contractor* to provide own barricading

5.9 Control of noise, dust, water and waste

- All necessary and relevant PPE must be used at all time when entering or working on plant.
- Work Permit Risk Assessment forms must be completed before commencing with any task.
- All relevant procedures to be used at all times.
- All waste material shall be removed and disposed of in nearest appropriate bins and the immediate area around where work has been carried out shall be cleaned.
- The contractor will have no title to any material being scrapped in the process of the execution of the works

5.10 Hook ups to existing works

5.10.1 Constraints on how the *Contractor* provides the *service*

- The *Employe*r reserves the right to terminate the contract, once 3 non-conformances are raised against the C*ontractor*
- The *Employer* reserves the right to have any of the *Contractor's* personnel removed off site without cancelling the contract if, in the *Employer's* opinion, it is warranted.
- The *Employer* reserves the right to request disciplinary/corrective action if, and when required.
- The Contractor complies with all site regulations issued by the Employer.
- Care must be taken to prevent damage to any surroundings such as plant, roads or equipment in and around existing buildings.
- The Contractor and his employees will be required to conduct themselves at all times in proper and orderly manner while on the Employer's premises.
- The Contractor and his employees may only smoke in the allowed/designated areas.
- The Employer will take immediate steps to institute criminal investigations in the event of any suspected criminal acts e.g. theft etc.
- Repeated serious criminal acts by Contractor's staff will be grounds for the cancellation of this contract.
- The Contractor will be required to clean and remove any debris and rubble arising from any work done under any agreement originated from this contract to ensure that the Employer's premises are left in a clean condition.
- All known *services* will be brought to the attention of the *Contractor* by the *Service Manager*. Should the *Contractor* encounter any other services in the work area, he will immediately bring it to the attention of the *Service Manager* who will issue instructions as to what actions are to be taken.
- Eskom carries no responsibility for unforeseen delays unless such a delay is negotiated within 24 hours of the occurrence and written agreement is submitted by Eskom.
- The contractor is not allowed to start any work on site before the employer's representative has issued the relevant working permits, and the plant is safe to work on.
-

5.11 Tests and inspections

- Test and Inspections will be done on scope execution by Eskom Maintenance and Engineering.

5.11.1 Description of tests and inspections

- Quality Control check sheets to be done between *Contractor* and employer

5.11.2 Materials facilities and samples for tests and *inspections*

- QC check sheets

6 List of drawings

6.1 Drawings issued by the Employer

- All relevant drawings can be obtained from the *Service Manager* or Eskom Supervisor.

• Drawing number	Revision	Title

7Appendix A

(Below an example of X17 for Service Manager to compile)

X17 Low service damages				
ITEM	**DESRICPTION OF TASK**	**QUALITY OF PERFORMANCE**	**REASON FOR DAMAGES**	**DAMAGES TO BE IMPLEMENTED**
Damaged components	Removal of components	Damage / Falling of Components	Environmental, Production	The Contractor will replace the damaged component on their own Cost

•

SECTION 37(2) AGREEMENT

CONCLUDED BETWEEN
ESKOM HOLDINGS SOC LIMITED
(Hereinafter referred to as Eskom)
AND

.
(Name of contractor/supplier)

I, _____ do hereby

acknowledge that is an employer in his/her own right, with duties as prescribed in the Occupational Health and Safety Act No. 85 of 1993 ("the Act"), as amended, and agree to ensure that all work will be performed and/or machinery or plant used in accordance with the provisions of the Act.

I undertake that _____shall strictly adhere to, and ensure that his/her employees adhere to, the provisions of the Occupational Health and Safety Act, 1993 (Act 85 of 1993).
I have been provided with SHE specifications for project/service**,** _____*, for contract/project number*] and will comply with the requirements set out in these.
I accept and agree that the SHE specifications constitute arrangements and procedures between

_____ And Eskom, which will ensure compliance by_____
with the provisions of the Act, as contemplated in section 37(2) of the Act.
This agreement constitutes the sole agreement between the parties, and no variation, modification, or waiver of any of the provisions of this agreement or consent to any departure from these shall, in any manner, be of any force or effect, unless confirmed in writing and signed by both parties, and such variation, modification, waiver, or consent shall be effective only in the specific instance and for the specific purpose and to the extent for which it was made or given.

This agreement is signed on behalf of the parties, each signatory to this warranting that he/she has the requisite authority to do so.

Signed this …….. Day of …... 20 ……

At ……..…….…… (*Place*)

(*Full name*)……..…… (*Signature*) ……

On behalf of …….. **(Supplier/contractor)**
Contractor Responsible Manager (*responsible for signing the Eskom contract on behalf of the contractor*)
Witnesses

1. ……
2. ……

Signed this …… day of ……...20……

At ……..…….…… (*Place*)

(*Full name*…….…….…… (*Signature*)…….…
On behalf of **Eskom Holdings SOC Limited.**
(Contracts and/or Project Manager or Eskom's representative)
Witnesses

1. ……...
2. ……

Contract _____ Contract Number_____

YEAR:-

Monthly Report for: Contractual Period

	KPA	Objective	Weight		Base	Target	Ceiling	Mth 1	Mth 2	Mth 3	Mth 4	Mth 5	Mth 6	Mth 7	Mth 8	Mth 9	Mth 10	Mth 11
1																		
2																		
3																		
4																		