TENDER DOCUMENT

FOR

CONTRACTOR APPOINTMENT FOR THE REPLACEMENT OF THE FIRE DETECTION SYSTEM AT KING SHAKA INTERNATIONAL AIRPORT.

Tender Reference Number: DIA6746/2021/RFP

22 NOVEMBER 2021

Issued by
Airports Company South Africa
King Shaka International Airport

Note:

Upon Acceptance of the Offer by the Employer, this Tender Document becomes the Contract Document, subsequent to which, all references to the term "Tenderer(s)" then become synonymous with the term "Contractor".

VOLUME 1

NAME OF TENDERER: ……

TENDERER'S DETAILS

1.	NAME OF TENDERER (BIDDING ENTITY)	(FULL NAME, i.e. (CC, (Pty) Ltd, JV, SOLE PROPRIETOR
.2.	TEL NUMBER	
.3.	FAX NUMBER	
.4.	EMAIL	
5.	NAME OF CONTACT	
6.	NATIONAL TREASURY CSD REGISTRATION NUMBER	

Contents

T1.1 Tender Notice and Invitation to Tender

Airports Company South Africa SOC Limited **invites tenders for** the Replacement of the Fire Detection System at King Shaka International Airport.

Tender Document Availability

Tender document are available from **22nd of NOVEMBER 2021** for free download from National Treasury's eTender Publication Portal **(http://www.etenders.gov.za)**. Kindly print and complete.

Queries relating to the issue of these documents may be addressed to Mochaki Monyela
Tel no. **011 723 7999**, E-mail address: Mochaki.Monyela@airports.co.za

Closing date for enquiries is **13th of December 2021 close of business day.**

Response to all enquiries will be posted on 15th of December 2021 no later than 16:00PM.

Non-Compulsory Tender Briefing and Site Inspection

A non-compulsory clarification meeting with representatives of the Employer will take place via Microsoft Teams on the 01st of December 2021 starting a 10:30AM.

Join on your computer or mobile app
Click here to join the meeting
Or call in (audio only)
+27 21 834 0841,,393297425# South Africa, Cape Town
Phone Conference ID: 393 297 425#
Find a local number | Reset PIN

Closing Date

The closing time for receipt of tenders is **14th of January 2022 at 12:00PM** (South African Standard Time).

Email Submission

The bid documents must be submitted via email using the following email address below.

Mochaki.Monyela@airports.co.za.

No late tenders will be accepted.

Bidders to ensure that their names and contacts are reflected on the cover of the bid document.

Tenders may only be submitted on the tender documentation that is issued.

Requirements for sealing, addressing, delivery, opening and assessment of tenders are stated in the Tender Data.

Confidential

T1.2 Tender Data

The conditions of tender are the Standard Conditions of Tender as contained in Annex C of the CIDB Standard for Uniformity in Construction Procurement (8 August 2019) as published in Government Gazette 42622, Board Notice 423 of 2019 of 8 August 2019. (See www.cidb.org.za).

The Standard Conditions of Tender make several references to the Tender Data for details that apply specifically to this tender. The Tender Data shall have precedence in the interpretation of any ambiguity or inconsistency between it and the Standard Conditions of Tender.

Each item of data given below is cross-referenced to the clause in the Standard Conditions of Tender to which it mainly applies.

Clause Number	Tender Data
C.1	**GENERAL**
C.1.1	The Employer is AIRPORTS COMPANY SOUTH AFRICA SOC LIMITED
C.1.2	The Tender Documents issued by the Employer comprise: **Part T1: Tendering Procedures** T1.1 Tender notice and invitation to tender T1.2 Tender data T1.3 CIDB Standard conditions of tender **Part T2: Returnable Document** T2.1 List of returnable documents T2.2 Returnable schedule **Part C1: Agreements and Contract Data** C1.1 Form of offer and acceptance C1.2 Contract data **Part C2: Pricing Schedule** C2.1 Pricing instructions C2.2 Activity Schedule with Price List **Part C3: Service Information** **Part C4: Site information**
C.1.4	The Employer's Agent is: **(SCM Representative)** Telephone number: 011 723 7999 Email address: Mochaki.Monyela@airports.co.za All communication during the Tender period shall not be made to the Principal Agent but to ACSA's Supply Chain Department
C.1.5	**C1.5 Cancellation and Re-Invitation of Tenders** C1.5.1 An employer may, prior to the award of the tender, cancel a tender if- due to changed circumstances, there is no longer a need for the engineering and construction works specified in the invitation. funds are no longer available to cover the total envisaged expenditure; or no acceptable tenders are received. there is a material irregularity in the tender process. C.1.5.2 The decision to cancel a tender invitation must be published in the same manner in which the original tender invitation was advertised C.1.5.3 An employer may only with the prior approval of the relevant treasury cancel a tender invitation for the second time.
C.1.6	**Procurement procedures** C.1.6.1 General

Confidential

	Unless otherwise stated in the tender data, a contract will, subject to C.3.13, be concluded with the tenderer who in terms of C.3.11 is the highest ranked or the tenderer scoring the highest number of tender evaluation points, as relevant, based on the tender submissions that are received at the closing time for tenders. **C.1.6.2 Competitive negotiation procedure** C.1.6.2.1 Where the tender data require that the competitive negotiation procedure is to be followed, tenderers shall submit tender offers in response to the proposed contract in the first round of submissions. Notwithstanding the requirements of C.3.4, the employer shall announce only the names of the tenderers who make a submission. The requirements of C.8 relating to the material deviations or qualifications which affect the competitive position of tenderers shall not apply. C.1.6.2.2 All responsive tenderers or at least a minimum of not less than three responsive tenderers that are highest ranked in terms of the evaluation criteria stated in the tender data shall be invited to enter into competitive negotiations based on the principle of equal treatment, keeping confidential the proposed solutions and associated information. Notwithstanding the provisions of C.2.17, the employer may request that tenders be clarified, specified and fine-tuned in order to improve a tenderer's competitive position provided that such clarification, specification, fine-tuning or additional information does not alter any fundamental aspects of the offers or impose substantial new requirements which restrict or distort competition or have a discriminatory effect. C.1.6.2.3 At the conclusion of each round of negotiations, tenderers shall be invited by the employer to revise their tender offer based on the same evaluation criteria, with or without adjusted weightings. Tenderers shall be advised when they are to submit their best and final offer. C.1.6.2.4 The contract shall be awarded in accordance with the provisions of C.3.11 and C.3.13 after tenderers have been requested to submit their best and final offer.
C.2	**TENDERER'S OBLIGATIONS**
C.2.1	**Eligibility** C.2.1.1 Submit a tender offer only if the tenderer satisfies the criteria stated in the tender data and the tenderer, or any of his principals, is not under any restriction to do business with employer. C.2.1.2 Notify the employer of any proposed material change in the capabilities or formation of the tendering entity (or both) or any other criteria which formed part of the qualifying requirements used by the employer as the basis in a prior process to invite the tenderer to submit a tender offer and obtain the employer's written approval to do so prior to the closing time for tenders.
C.2.2	**Cost of tendering** C.2.2.1 Accept that, unless otherwise stated in the tender data, the employer will not compensate the tenderer for any costs incurred in the preparation and submission of a tender offer, including the costs of any testing necessary to demonstrate that aspects of the offer complies with requirements.
C.2.3	**Check documents** Check the tender documents on receipt for completeness and notify the employer of any discrepancy or omission.
C.2.4	**Confidentiality and copyright of documents** Treat as confidential all matters arising in connection with the tender. Use and copy the documents issued by the employer only for the purpose of preparing and submitting a tender offer in response to the invitation.

Confidential

C.2.6	**Acknowledge addenda** Acknowledge receipt of addenda to the tender documents, which the employer may issue, and if necessary, apply for an extension to the closing time stated in the tender data, in order to take the addenda into account.
C.2.7	**Clarification meeting** The arrangements for a non-compulsory briefing session are as stated in the Tender Notice and Invitation to Tender (T1.1). Tenderers must sign the attendance list in the name of the tendering entity. Addenda will be issued to and tenders will be received only from those tendering entities appearing on the attendance list.
C.2.8	**Seek clarification** Request clarification of the tender documents, if necessary, by notifying the employer at least five (5) working days before the closing time stated in the tender data.
C.2.9	**Insurance** Be aware that the extent of insurance to be provided by the employer (if any) might not be for the full cover required in terms of the conditions of contract identified in the contract data. The tenderer is advised to seek qualified advice regarding insurance.
C.2.10.3	This contract shall not be subject to Contract Price Adjustments, foreign fluctuations, etc and all rates and prices shall remain FIXED, final and binding for the full duration of this contract.
C.2.11	**Alterations to documents** Do not make any alterations or additions to the tender documents, except to comply with instructions issued by the employer, or necessary to correct errors made by the tenderer. All signatories to the tender offer shall initial all such alterations.
C.2.12	Alternative bids will not be considered. (If applicable please copy the clause as per SFU 2019)
C.2.13	**Submitting a tender offer** C.2.13.1 Submit one tender offer only, either as a single tendering entity or as a member in a joint venture to provide the whole of the works identified in the contract data and described in the scope of works, unless stated otherwise in the tender data. C.2.13.2 Return all returnable documents to the employer after completing them in their entirety, either electronically (if they were issued in electronic format) or by writing legibly in non-erasable ink. C.2.13.3 Submit the parts of the tender offer communicated on paper as an original plus the number of copies stated in the tender data, with an English translation of any documentation in a language other than English, and the parts communicated electronically in the same format as they were issued by the employer. C.2.13.4 Sign the original and all copies of the tender offer where required in terms of the tender data. The employer will hold all authorized signatories liable on behalf of the tenderer. Signatories for tenderers proposing to contract as joint ventures shall state which of the signatories is the lead partner whom the employer shall hold liable for the purpose of the tender offer.
C.2.14	**Information and data to be completed in all respects** Accept that tender offers, which do not provide all the data or information requested completely and, in the form, required, may be regarded by the employer as non-responsive.
C.2.15	**Closing time**

Confidential

	The Employer's details and address for delivery of tender offers and identification details that are to be shown on each tender offer package are: **Email Submission** The bid documents must be submitted via email using the following email address below. Mochaki.Monyela@airports.co.za. **PLEASE SUBMIT IN PDF FORMAT AND BIDDERS MUST NOT SEND THEIR SUBMISSION AS ONE BIG ATTACHEMENT. BREAK YOUR SUBMISSION IN AT LEAST (04) FOUR OR MORE ATTACHMENTS OF 4MB EACH THE TOTAL EMAIL SHOULD NOT EXCEED 30MB.** **LINKS FOR DOCUMENT DOWNLOAD (E.G. DROPBOX, WETRANSFER, ETC.) WILL NOT BE ACCEPTED.** **Please send an additional email to the email address above, stating that you have made a submission once you have sent all your attachment.** **Identification details:** **Bid Ref. No:** **DIA6746/2021/RFP** **Title:** **Contractor Appointment for the Replacement of the Fire Detection System at King Shaka International Airport.** **Closing Date:** **14th of January 2022** **Time:** **12:00PM**
C.2.16	**Tender offer validity** C.2.16.1 Hold the tender offer(s) valid for eighty-four (84) working days for acceptance by the employer at any time during the validity period stated after the closing time stated in the tender data. C.2.16.2 If requested by the employer, consider extending the validity period stated in the tender data for an agreed additional period with or without any conditions attached to such extension. C.2.16.3 Accept that a tender submission that has been submitted to the employer may only be withdrawn or substituted by giving the employer's agent written notice before the closing time for tenders that a tender is to be withdrawn or substituted. If the validity period stated in C.2.16 lapses before the employer evaluating tender, the contractor reserves the right to review the price based on Consumer Price Index (CPI). C.2.16.4 Where a tender submission is to be substituted, a tenderer must submit a substitute tender in accordance with the requirements of C.2.13 with the packages clearly marked as "SUBSTITUTE".
C.2.17	Clarification of tender offer after submission Provide clarification of a tender offer in response to a request to do so from the employer during the evaluation of tender offers. This may include providing a breakdown of rates or prices and correction of arithmetical errors by the adjustment of certain rates or item prices (or both). No change in the competitive position of tenderers or substance of the tender offer is sought, offered, or permitted.
C.2.20	**Submit securities, bonds and policies** If requested, submit for the employer's acceptance before formation of the contract, all securities, bonds, guarantees, policies and certificates of insurance required in terms of the conditions of contract identified in the contract data.

Confidential

C.3	EMPLOYER'S UNDERTAKINGS
C.3.1	**Respond to requests from the tenderer** The Employer will respond to requests for clarification received up to five (**5**) working days before the tender closing time.
C.3.2	**Issue Addenda** Addenda will be issued until three (3) working days before the tender closing time.
C.3.3	**Return late tender offers** Tender offers received after the closing time stated in the Tender Data will be returned, unopened, (unless it is necessary to open a tender submission to obtain a forwarding address), to the tenderer concerned.
C.3.4	There will **NOT** be a public opening of tenders after the closing date and time. Tender opening register will be made available to all interested bidders upon request.
C.3.7	**Grounds for rejection and disqualification** Determine whether there has been any effort by a tenderer to influence the processing of tender offers and instantly disqualify a tenderer (and his tender offer) if it is established that he engaged in corrupt or fraudulent practices.
C.3.8	**Test for Responsiveness** C.3.8.1 Determine, after opening and before detailed evaluation, whether each tender offer properly received: a) complies with the requirements of these Conditions of Tender, (scope work, pricing, proposed amendments and qualifications, cover letters must be considered) b) has been properly and fully completed and signed, and c) is responsive to the other requirements of the tender documents. (check certificates if attached, e.g. Qualifications, etc allow bidder reasonable time to submit.) C.3.8.2 A responsive tender is one that conforms to all the terms, conditions, and specifications of the tender documents without material deviation or qualification. A material deviation or qualification is one which, in the Employer's opinion, would: a) detrimentally affect the scope, quality, or performance of the works, services or supply identified in the Scope of Work, b) significantly change the Employer's or the tenderer's risks and responsibilities under the contract, or c) affect the competitive position of other tenderers presenting responsive tenders, if it were to be rectified. Reject a non-responsive tender offer, and not allow it to be subsequently made responsive by correction or withdrawal of the non-conforming deviation or reservation.
C.3.9	**Arithmetical errors, omissions and discrepancies.** C.3.9.1 Check responsive tenders for discrepancies between amounts in words and amounts in figures. Where there is a discrepancy between the amounts in figures and the amount in words, the amount in words shall govern. C.3.9.2 Check the highest ranked tender or tenderer with the highest number of tender evaluation points after the evaluation of tender offers in accordance with C.3.11 for: a) the gross misplacement of the decimal point in any unit rate; b) omissions made in completing the pricing schedule or bills of quantities; or

	c) arithmetic errors in: (i) line item totals resulting from the product of a unit rate and a quantity in bills of quantities or schedules of prices; or (ii) the summation of the prices. C.3.9.3 Notify the tenderer of all errors or omissions that are identified in the tender offer and either confirm the tender offer as tendered or accept the corrected total of prices. C.3.9.4 Where the tenderer elects to confirm the tender offer as tendered, correct the errors as follows: a) If bills of quantities or pricing schedules apply and there is an error in the line item total resulting from the product of the unit rate and the quantity, the line item total shall govern and the rate shall be corrected. Where there is an obviously gross misplacement of the decimal point in the unit rate, the line item total as quoted shall govern, and the unit rate shall be corrected. b) Where there is an error in the total of the prices either as a result of other corrections required by this checking process or in the tenderer's addition of prices, the total of the prices shall govern and the tenderer will be asked to revise selected item prices (and their rates if bills of quantities apply) to achieve the tendered total of the prices.
C.3.10	**Clarification of a tender offer** Obtain clarification from a tenderer on any matter that could give rise to ambiguity in a contract arising from the tender offer.

Confidential

C.3.11

Stage 1 Test for Responsiveness (as per clause C.3.8)

Stage 2 Pre-Qualification Criteria
In terms of the PPPFA Regulation 4, an organ of state can apply pre-qualifying criteria to advance certain Designated Groups.

Accordingly, only the bidders with a **minimum B-BBEE status Level 1- 3** are eligible to bid. Please note in the event of a joint venture (JV) a valid consolidated BBBEE verification in the name of the JV shall be submitted.

A tenderer that fails to meet the above-mentioned pre-qualifying criteria at closing date, will be disqualified and not further evaluated.

Stage 3 Mandatory Administration Criteria

(a) Completed in full and signed Form of offer C1.1.
(b) Letter of Good standing with workman's compensation commissioner COIDA.
(c) Tenderers must complete and sign the declaration of interest form (SBD 4).
(d) Signing of the SBD 8 **(Declaration of bidder's past supply chain management Practices)**
(e) Only Bidders with a CIDB Contractor Grading of only 6 EB OR 6 SF OR 5 EB PE OR 5 SF PE or higher. Proof of application or registration with the CIDB must be provided

Stage 4 Functionality Evaluation Criteria
Functionality is the terminology used to define the technical ability of the Tenderer, based on experience to deliver the required product in accordance with the specialised quality, reliability and functionality.

Points allocated for Functionality shall be evaluated in accordance with the criteria as listed below. An overall minimum threshold of **60 points out of 100** must be achieved for the tender to be eligible for further evaluation on Price and B-BBEE.

	Evaluation Area	**Max Points**	**Minimum Threshold**
1 & 2	**Company Experience** Company experience Company reference	 10 10	 5 5
3	**OEM Support Letter**	10	5
4,5&6	**Company Resources** Experience Education Registration	 26 23 6	 14 12 6
7	**Programme & Schedule**	5	3
8	**Fire Detection Commissioning SAQCC Registration**	5	5
9	**ORHVS Responsible Person (Competence certificate)**	5	5
	TOTAL	**100**	**60**

Confidential

<u>Bidders who also fail to achieve the minimum score per criteria will be disqualified and not be eligible for further evaluations</u>.

FUNTIONALITY EVALUATION

Criteria Description	Minimum Threshold	Maximum
Company Experience Proven experience in Fire Detection System Replacement or Installation within the last 10 years. **<2 Projects** **0** **2 Projects** **5** **3 or more Projects** **10** Proven experience must be demonstrated by means of list of projects and high-level detailed scope, Purchase orders, Tender awards etc.	**5**	**10**
Company References Contactable references for where works was executed for the projects listed above. **<2 References** **0** **2 References** **5** **3 or more References** **10** Contactable references must include site where project was done, this must include telephone or cell phone numbers, email address and contact names.	**5**	**10**
Letter of intent from OEM to supply reputable Fire Detection Products A supplier must provide in writing, commitment from OEM supplier to supply reputable and compliant Fire Detection and Protection System Products **No Valid certificate/Letter** **0** **Proof of communication** **5** **OEM Letter of Intent** **10**	**5**	**10**
Contract Manager ***Relevant Experience*** *(Comprehensive CV that includes previous projects and contactable references to be provided)* >5 years: 10 / 3 – 5 Years: 6 / <3 Years: 0 ***Relevant Education*** *(Certified qualification to be provided)* Higher: 10 / Diploma: 5	**6** **5**	**10** **10**

Confidential

Installation Technician (Installer) ***Relevant Experience*** *(Comprehensive CV that includes previous projects and contactable references to be provided)* >5 years: 12 / 3 – 5 Years: 6 / <3 Years: 0 ***SAQCC registration*** Provided: 5 / Not Provided: 0 ***Relevant Education*** *(Certified qualification to be provided)* > N3 Elec: 12 / N3 Elec: 6 / <N3 Elec: 0	6 5 6	12 5 12
Technical Assistant (Cabler) ***Relevant Experience*** *(Comprehensive CV that includes previous projects and contactable references to be provided)* >5 years: 4 / 3 – 5 Years: 2 / <3 Years: 0 ***SAQCC registration*** Provided: 1 / Not Provided: 0 ***Relevant Education*** *(Certified qualification to be provided)* >=N2 Elec: 1 / <N2 Elec: 0	2 1 1	4 1 1
Programme & Schedule **No Programme** 0 **Programme without timelines** 3 **Programme with timelines** 5 *The respondent will provide a preliminary Programme (Microsoft Project format or excel) which demonstrates realistic time frames which meets the required project duration.* *The project Programme must address, as far as possible, potential delays. The Programme must recognise the milestones as indicated in the contract data clause X7 demonstrate good knowledge of the project and provide rational mitigating strategies.*	3	5
Fire Detection Commissioning SAQCC Registration	5	5
ORHVS Responsible Person (Competence certificate)	5	5
Total	60	100

Stage 5 Determine acceptability of preferred tenderer:

Perform a risk analysis on the preferred tenderer to ascertain if any of the following might present an unacceptable commercial risk to the employer:
Unduly high or unduly low tendered rates or amounts in the tender offer.
Contract data provided by the tendered; or
The contents of the tender returnable which are to be included in the contract.

Confidential

Stage 6 Price and BBBEE (80/20)

(a) Tenderers will be evaluated and adjudicated by the Employer using "The 80/20 preference point system" which awards points on the basis of:

- The Tendered price (as per form of offer) – 80%
- BBBEE – 20%

(b) The Employer will award the Contract to a Tenderer who is qualified to undertake the Works and whose Tender technically and contractually complies with the specification.

The 80/20 preference points system for acquisition of services, works or goods estimated to not exceed R50 000 000 (all applicable taxes included) and therefore the 80/20 preference point system shall be applicable.

The following formula must be used to calculate the points for price in respect of tenders with a Rand value above R50 000 000 (all applicable taxes included):

$$Ps = 80\left(1 + \frac{Pt - Pmax}{Pmax}\right)$$

Where

Where Ps :Points scored for price of tender under consideration

Pt : Rand value of offer tender consideration

Pmin : Rand value of lowest acceptable tender

(b) Subject to subparagraph(5)(c), points must be awarded to a tender for attaining the B-BBEE status level of contributor in accordance with the table below:

B-BBEE status level of contributor	Number of points
1	20
2	18
3	14
4	12
5	8
6	4
7	4
8	2
Non-compliant contributor	0

Airports Company South Africa reserves the right to amend or replace the preference point system used in accordance with the company's tender procedure.

C.3.12	**Insurance provided by the employer** **Refer to Contract Data**
C.3.13	C.3.13 Acceptance of tender offer Accept the tender offer; if in the opinion of the employer, it does not present any risk and only if the tenderer: a) is not under restrictions, or has principals who are under restrictions, preventing participating in the employer's procurement; b) can, as necessary and in relation to the proposed contract, demonstrate that he or she possesses the professional and technical qualifications, professional and technical competence, financial resources, equipment and other physical facilities, managerial capability, reliability, experience and reputation, expertise and the personnel, to perform the contract; c) has the legal capacity to enter into the contract; d) is not; insolvent, in receivership, under Business Rescue as provided for in chapter 6 of the Companies Act No. 2008, bankrupt or being wound up, has his/her affairs administered by a court or a judicial officer, has suspended his/her business activities or is subject to legal proceedings in respect of any of the foregoing; e) complies with the legal requirements, if any, stated in the tender data; and f) is able, in the opinion of the employer, to perform the contract free of conflicts of interest.

Confidential

Standard Conditions of Tender

General

Actions

The employer and each tenderer submitting a tender offer shall comply with these conditions of tender. In their dealings with each other, they shall discharge their duties and obligations as set out in C.2 and C.3, timeously and with integrity, and behave equitably, honestly and transparently, comply with all legal obligations and not engage in anticompetitive practices.

The employer and the tenderer and all their agents and employees involved in the tender process shall avoid conflicts of interest and where a conflict of interest is perceived or known, declare any such conflict of interest, indicating the nature of such conflict. Tenderers shall declare any potential conflict of interest in their tender submissions. Employees, agents and advisors of the employer shall declare any conflict of interest to whoever is responsible for overseeing the procurement process at the start of any deliberations relating to the procurement process or as soon as they become aware of such conflict and abstain from any decisions where such conflict exists or recuse themselves from the procurement process, as appropriate.

Note: 1) A conflict of interest may arise due to a conflict of roles which might provide an incentive for improper acts in some circumstances. A conflict of interest can create an appearance of impropriety that can undermine confidence in the ability of that person to act properly in his or her position even if no improper acts result.

2) Conflicts of interest in respect of those engaged in the procurement process include direct, indirect or family interests in the tender or outcome of the procurement process and any personal bias, inclination, obligation, allegiance or loyalty which would in any way affect any decisions taken.

The employer shall not seek and a tenderer shall not submit a tender without having a firm intention and the capacity to proceed with the contract.

Tender Documents

The documents issued by the employer for the purpose of a tender offer are listed in the tender data.

Interpretation

The tender data and additional requirements contained in the tender schedules that are included in the returnable documents are deemed to be part of these conditions of tender.

These conditions of tender, the tender data and tender schedules which are required for tender evaluation purposes, shall form part of any contract arising from the invitation to tender.

For the purposes of these conditions of tender, the following definitions apply:

conflict of interest means any situation in which:

someone in a position of trust has competing professional or personal interests which make it difficult to fulfil his or her duties impartially;
an individual or tenderer is in a position to exploit a professional or official capacity in some

Confidential

way for their personal or corporate benefit; or
incompatibility or contradictory interests exist between an employee and the tenderer who employs that employee.

comparative offer means the price after the factors of a non-firm price and all unconditional discounts it can be utilised to have been taken into consideration;

corrupt practice means the offering, giving, receiving or soliciting of anything of value to influence the action of the employer or his staff or agents in the tender process;

fraudulent practice means the misrepresentation of the facts in order to influence the tender process or the award of a contract arising from a tender offer to the detriment of the employer, including collusive practices intended to establish prices at artificial levels;

Communication and employer's agent

Each communication between the employer and a tenderer shall be to or from the employer's agent only, and in a form that can be readily read, copied and recorded. Communications shall be in the English language. The employer shall not take any responsibility for non-receipt of communications from or by a tenderer. The name and contact details of the employer's agent are stated in the tender data.

Cancellation and Re-Invitation of Tenders

An employer may, prior to the award of the tender, cancel a tender if-

due to changed circumstances, there is no longer a need for the engineering and construction works specified in the invitation;

funds are no longer available to cover the total envisaged expenditure; or

no acceptable tenders are received.

there is a material irregularity in the tender process.

The decision to cancel a tender invitation must be published in the same manner in which the original tender invitation was advertised

An employer may only with the prior approval of the relevant treasury cancel a tender invitation for the second time.

Procurement procedures

General

Unless otherwise stated in the tender data, a contract will, subject to C.3.13, be concluded with the tenderer who in terms of C.3.11 is the highest ranked or the tenderer scoring the highest number of tender evaluation points, as relevant, based on the tender submissions that are received at the closing time for tenders.

Competitive negotiation procedure

Where the tender data require that the competitive negotiation procedure is to be followed, tenderers shall submit tender offers in response to the proposed contract in the first round

Confidential

of submissions. Notwithstanding the requirements of C.3.4, the employer shall announce only the names of the tenderers who make a submission. The requirements of C.8 relating to the material deviations or qualifications which affect the competitive position of tenderers shall not apply.

All responsive tenderers or at least a minimum of not less than three responsive tenderers that are highest ranked in terms of the evaluation criteria stated in the tender data shall be invited to enter into competitive negotiations based on the principle of equal treatment, keeping confidential the proposed solutions and associated information.

Notwithstanding the provisions of C.2.17, the employer may request that tenders be clarified, specified and fine-tuned in order to improve a tenderer's competitive position provided that such clarification, specification, fine-tuning or additional information does not alter any fundamental aspects of the offers or impose substantial new requirements which restrict or distort competition or have a discriminatory effect.

At the conclusion of each round of negotiations, tenderers shall be invited by the employer to revise their tender offer based on the same evaluation criteria, with or without adjusted weightings. Tenderers shall be advised when they are to submit their best and final offer.

The contract shall be awarded in accordance with the provisions of C.3.11 and C.3.13 after tenderers have been requested to submit their best and final offer.

Proposal procedure using the two stage-system

Option 1 (Chosen option)

Tenderers shall in the first stage submit technical proposals and, if required, cost parameters around which a contract may be negotiated. The employer shall evaluate each responsive submission in terms of the method of evaluation stated in the tender data, and in the second stage negotiate a contract with the tenderer scoring the highest number of evaluation points and award the contract in terms of these conditions of tender.

Tenderer's obligations

Eligibility

Submit a tender offer only if the tenderer satisfies the criteria stated in the tender data and the tenderer, or any of his principals, is not under any restriction to do business with employer.

Notify the employer of any proposed material change in the capabilities or formation of the tendering entity (or both) or any other criteria which formed part of the qualifying requirements used by the employer as the basis in a prior process to invite the tenderer to submit a tender offer and obtain the employer's written approval to do so prior to the closing time for tenders.

Cost of tendering

Accept that, unless otherwise stated in the tender data, the employer will not compensate the tenderer for any costs incurred in the preparation and submission of a tender offer, including the costs of any testing necessary to demonstrate that aspects of the offer complies with requirements.

The cost of the tender documents charged by the employer shall be limited to the actual cost incurred by the employer for printing the documents. Employers must attempt to make available the tender documents on its website so as not to incur any costs pertaining to the printing of the tender documents.

Check documents

Check the tender documents on receipt for completeness and notify the employer of any discrepancy or omission.

Confidentiality and copyright of documents

Treat as confidential all matters arising in connection with the tender. Use and copy the documents issued by the employer only for the purpose of preparing and submitting a tender offer in response to the invitation.

Reference documents

Obtain, as necessary for submitting a tender offer, copies of the latest versions of standards, specifications, conditions of contract and other publications, which are not attached but which are incorporated into the tender documents by reference.

Acknowledge addenda

Acknowledge receipt of addenda to the tender documents, which the employer may issue, and if necessary, apply for an extension to the closing time stated in the tender data, in order to take the addenda into account.

Clarification meeting

Attend, where required, a clarification meeting at which tenderers may familiarize themselves with aspects of the proposed work, services or supply and raise questions. Details of the meeting(s) are stated in the tender data.

Seek clarification

Request clarification of the tender documents, if necessary, by notifying the employer at least five (5) working days before the closing time stated in the tender data.

Insurance

Be aware that the extent of insurance to be provided by the employer (if any) might not be for the full cover required in terms of the conditions of contract identified in the contract data. The tenderer is advised to seek qualified advice regarding insurance.

Pricing the tender offer

Include in the rates, prices, and the tendered total of the prices (if any) all duties, taxes except Value Added Tax (VAT), and other levies payable by the successful tenderer, such duties, taxes and levies being those applicable fourteen (14) days before the closing time stated in the tender data.

Confidential

Show VAT payable by the employer separately as an addition to the tendered total of the prices.

Provide rates and prices that are fixed for the duration of the contract and not subject to adjustment except as provided for in the conditions of contract identified in the contract data.

State the rates and prices in Rand unless instructed otherwise in the tender data. The conditions of contract identified in the contract data may provide for part payment in other currencies.

Alterations to documents

Do not make any alterations or additions to the tender documents, except to comply with instructions issued by the employer, or necessary to correct errors made by the tenderer. All signatories to the tender offer shall initial all such alterations.

Alternative tender offers

Unless otherwise stated in the tender data, submit alternative tender offers only if a main tender offer, strictly in accordance with all the requirements of the tender documents, is also submitted as well as a schedule that compares the requirements of the tender documents with the alternative requirements that are proposed.

Accept that an alternative tender offer must be based only on the criteria stated in the tender data or criteria otherwise acceptable to the employer.

An alternative tender offer must only be considered if the main tender offer is the winning tender.

Submitting a tender offer

Submit one tender offer only, either as a single tendering entity or as a member in a joint venture to provide the whole of the works identified in the contract data and described in the scope of works, unless stated otherwise in the tender data.

Return all returnable documents to the employer after completing them in their entirety, either electronically (if they were issued in electronic format) or by writing legibly in non-erasable ink.

Submit the parts of the tender offer communicated on paper as an original plus the number of copies stated in the tender data, with an English translation of any documentation in a language other than English, and the parts communicated electronically in the same format as they were issued by the employer.

Sign the original and all copies of the tender offer where required in terms of the tender data. The employer will hold all authorized signatories liable on behalf of the tenderer. Signatories for tenderers proposing to contract as joint ventures shall state which of the signatories is the lead partner whom the employer shall hold liable for the purpose of the tender offer.

Seal the original and each copy of the tender offer as separate packages marking the packages as "ORIGINAL" and "COPY". Each package shall state on the outside the

Confidential

employer's address and identification details stated in the tender data, as well as the tenderer's name and contact address.

Where a two-envelope system is required in terms of the tender data, place and seal the returnable documents listed in the tender data in an envelope marked “financial proposal” and place the remaining returnable documents in an envelope marked “technical proposal”. Each envelope shall state on the outside the employer’s address and identification details stated in the tender data, as well as the tenderer's name and contact address.

Seal the original tender offer and copy packages together in an outer package that states on the outside only the employer's address and identification details as stated in the tender data.

Accept that the employer will not assume any responsibility for the misplacement or premature opening of the tender offer if the outer package is not sealed and marked as stated.

Accept that tender offers submitted by facsimile or e-mail will be rejected by the employer, unless stated otherwise in the tender data.

Information and data to be completed in all respects

Accept that tender offers, which do not provide all the data or information requested completely and, in the form, required, may be regarded by the employer as non-responsive.

Closing time

Ensure that the employer receives the tender offer at the address specified in the tender data not later than the closing time stated in the tender data. Accept that proof of posting shall not be accepted as proof of delivery.

Accept that, if the employer extends the closing time stated in the tender data for any reason, the requirements of these conditions of tender apply equally to the extended deadline.

Tender offer validity

Hold the tender offer(s) valid for acceptance by the employer at any time during the validity period stated in the tender data after the closing time stated in the tender data.

If requested by the employer, consider extending the validity period stated in the tender data for an agreed additional period with or without any conditions attached to such extension.

Accept that a tender submission that has been submitted to the employer may only be withdrawn or substituted by giving the employer’s agent written notice before the closing time for tenders that a tender is to be withdrawn or substituted. If the validity period stated in C.2.16 lapses before the employer evaluating tender, the contractor reserves the right to review the price based on Consumer Price Index (CPI).

Where a tender submission is to be substituted, a tenderer must submit a substitute tender in accordance with the requirements of C.2.13 with the packages clearly marked as “SUBSTITUTE”.

Confidential

Clarification of tender offer after submission

Provide clarification of a tender offer in response to a request to do so from the employer during the evaluation of tender offers. This may include providing a breakdown of rates or prices and correction of arithmetical errors by the adjustment of certain rates or item prices (or both). No change in the competitive position of tenderers or substance of the tender offer is sought, offered, or permitted.

Note: *Sub-clause C.2.17 does not preclude the negotiation of the final terms of the contract with a preferred tenderer following a competitive selection process, should the Employer elect to do so.*

Provide other material

Provide, on request by the employer, any other material that has a bearing on the tender offer, the tenderer's commercial position (including notarized joint venture agreements), preferencing arrangements, or samples of materials, considered necessary by the employer for the purpose of a full and fair risk assessment.

Should the tenderer not provide the material, or a satisfactory reason as to why it cannot be provided, by the time for submission stated in the employer's request, the employer may regard the tender offer as non-responsive.

Dispose of samples of materials provided for evaluation by the employer, where required.

Inspections, tests and analysis

Provide access during working hours to premises for inspections, tests and analysis as provided for in the tender data.

Submit securities, bonds and policies

If requested, submit for the employer's acceptance before formation of the contract, all securities, bonds, guarantees, policies and certificates of insurance required in terms of the conditions of contract identified in the contract data.

Check final draft

Check the final draft of the contract provided by the employer within the time available for the employer to issue the contract.

Return of other tender documents

If so, instructed by the employer, return all retained tender documents within twenty-eight (28) days after the expiry of the validity period stated in the tender data.

Certificates

Include in the tender submission or provide the employer with any certificates as stated in the tender data.

The employer's undertakings

Respond to requests from the tenderer

Unless otherwise stated in the tender Data, respond to a request for clarification received up to five (5) working days before the tender closing time stated in the Tender Data and notify all tenderers who collected tender documents.

Consider any request to make a material change in the capabilities or formation of the tendering entity (or both) or any other criteria which formed part of the qualifying requirements used to prequalify a tenderer to submit a tender offer in terms of a previous procurement process and deny any such request if as a consequence:

an individual firm, or a joint venture as a whole, or any individual member of the joint venture fails to meet any of the collective or individual qualifying requirements;
the new partners to a joint venture were not prequalified in the first instance, either as individual firms or as another joint venture; or
in the opinion of the Employer, acceptance of the material change would compromise the outcome of the prequalification process.

Issue Addenda

If necessary, issue addenda that may amend or amplify the tender documents to each tenderer during the period from the date that tender documents are available until three (3) working days before the tender closing time stated in the Tender Data. If, as a result a tenderer applies for an extension to the closing time stated in the Tender Data, the Employer may grant such extension and, shall then notify all tenderers who collected tender documents.

Return late tender offers

Return tender offers received after the closing time stated in the Tender Data, unopened, (unless it is necessary to open a tender submission to obtain a forwarding address), to the tenderer concerned.

Opening of tender submissions

Unless the two-envelope system is to be followed, open valid tender submissions in the presence of tenderers' agents who choose to attend at the time and place stated in the tender data. Tender submissions for which acceptable reasons for withdrawal have been submitted will not be opened.

Announce at the meeting held immediately after the opening of tender submissions, at a venue indicated in the tender data, the name of each tenderer whose tender offer is opened and, where

applicable, the total of his prices, number of points claimed for its BBBEE status level and time for completion for the main tender offer only.

Make available the record outlined in C.3.4.2 to all interested persons upon request.

Two-envelope system (Not Applicable)

Where stated in the tender data that a two-envelope system is to be followed, open only the

Confidential

technical proposal of valid tenders in the presence of tenderers' agents who choose to attend at the time and place stated in the tender data and announce the name of each tenderer whose technical proposal is opened.

Evaluate functionality of the technical proposals offered by tenderers, then advise tenderers who remain in contention for the award of the contract of the time and place when the financial proposals will be opened. Open only the financial proposals of tenderers, who score in the functionality evaluation more than the minimum number of points for functionality stated in the tender data, and announce the score obtained for the technical proposals and the total price and any points claimed on BBBEE status level. Return unopened financial proposals to tenderers whose technical proposals failed to achieve the minimum number of points for functionality.

Non-disclosure

Not disclose to tenderers, or to any other person not officially concerned with such processes, information relating to the evaluation and comparison of tender offers, the final evaluation price and recommendations for the award of a contract, until after the award of the contract to the successful tenderer.

Grounds for rejection and disqualification

Determine whether there has been any effort by a tenderer to influence the processing of tender offers and instantly disqualify a tenderer (and his tender offer) if it is established that he engaged in corrupt or fraudulent practices.

Test for responsiveness

Determine, after opening and before detailed evaluation, whether each tender offer properly received:

complies with the requirements of these Conditions of Tender,
has been properly and fully completed and signed, and
is responsive to the other requirements of the tender documents.

A responsive tender is one that conforms to all the terms, conditions, and specifications of the tender documents without material deviation or qualification. A material deviation or qualification is one which, in the Employer's opinion, would:

detrimentally affect the scope, quality, or performance of the works, services or supply identified in the Scope of Work,
significantly change the Employer's or the tenderer's risks and responsibilities under the contract, or
affect the competitive position of other tenderers presenting responsive tenders, if it were to be rectified.

Reject a non-responsive tender offer, and not allow it to be subsequently made responsive by correction or withdrawal of the non-conforming deviation or reservation.

Arithmetical errors, omissions and discrepancies

Check responsive tenders for discrepancies between amounts in words and amounts in figures. Where there is a discrepancy between the amounts in figures and the amount in words, the amount in words shall govern.

Check the highest ranked tender or tenderer with the highest number of tender evaluation points after the evaluation of tender offers in accordance with C.3.11 for:

the gross misplacement of the decimal point in any unit rate;
omissions made in completing the pricing schedule or bills of quantities; or
arithmetic errors in:

line item totals resulting from the product of a unit rate and a quantity in bills of quantities or schedules of prices; or
the summation of the prices.

Notify the tenderer of all errors or omissions that are identified in the tender offer and either confirm the tender offer as tendered or accept the corrected total of prices.

Where the tenderer elects to confirm the tender offer as tendered, correct the errors as follows:

If bills of quantities or pricing schedules apply and there is an error in the line-item total resulting from the product of the unit rate and the quantity, the line-item total shall govern and the rate shall be corrected. Where there is an obviously gross misplacement of the decimal point in the unit rate, the line-item total as quoted shall govern, and the unit rate shall be corrected.

Where there is an error in the total of the prices either as a result of other corrections required by this checking process or in the tenderer's addition of prices, the total of the prices shall govern and the tenderer will be asked to revise selected item prices (and their rates if bills of quantities apply) to achieve the tendered total of the prices.

Clarification of a tender offer

Obtain clarification from a tenderer on any matter that could give rise to ambiguity in a contract arising from the tender offer.

Evaluation of tender offers

The Standard Conditions of Tender standardize the procurement processes, methods and procedures from the time that tenders are invited to the time that a contract is awarded. They are generic in nature and are made project specific through choices that are made in developing the Tender Data associated with a specific project.

Conditions of tender are by definition the document that establishes a tenderer’s obligations in submitting a tender and the employer’s undertakings in soliciting and evaluating tender offers. Such conditions establish the rules from the time a tender is advertised to the time that a contract is awarded and require employers to conduct the process of offer and acceptance in terms of a set of standard procedures.

Confidential

The CIDB Standard Conditions of Tender are based on a procurement system that satisfies the following system requirements:	
Requirement	**Qualitative interpretation of goal**
Fair	The process of offer and acceptance is conducted impartially without bias, providing simultaneous and timely access to participating parties to the same information.
Equitable	Terms and conditions for performing the work do not unfairly prejudice the interests of the parties.
Transparent	The only grounds for not awarding a contract to a tenderer who satisfies all requirements are restrictions from doing business with the employer, lack of capability or capacity, legal impediments and conflicts of interest.
Competitive	The system provides for appropriate levels of competition to ensure cost effective and best value outcomes.
Cost effective	The processes, procedures and methods are standardized with sufficient flexibility to attain best value outcomes in respect of quality, timing and price, and least resources to effectively manage and control procurement processes.

The activities associated with evaluating tender offers are as follows:

Open and record tender offers received
Determine whether or not tender offers are complete
Determine whether or not tender offers are responsive
Evaluate tender offers
Determine if there are any grounds for disqualification
Determine acceptability of preferred tenderer
Prepare a tender evaluation report
Confirm the recommendation contained in the tender evaluation report

General

The employer must appoint an evaluation panel of not less than three persons conversant with the proposed scope of works to evaluate each responsive tender offer using the tender evaluation methods and associated evaluation criteria and weightings that are specified in the tender data.

Insurance provided by the employer

If requested by the proposed successful tenderer, submit for the tenderer's information the policies and / or certificates of insurance which the conditions of contract identified in the contract data, require the employer to provide.

Acceptance of tender offer

Accept the tender offer; if in the opinion of the employer, it does not present any risk and only if the tenderer:

is not under restrictions, or has principals who are under restrictions,
preventing participating in the employer's procurement;
can, as necessary and in relation to the proposed contract, demonstrate that he or she possesses the professional and technical qualifications, professional and technical competence, financial resources, equipment and other physical facilities, managerial capability, reliability, experience and reputation, expertise and the personnel, to perform the contract;

Confidential

has the legal capacity to enter into the contract;
is not; insolvent, in receivership, under Business Rescue as provided for in chapter 6 of the Companies Act No. 2008, bankrupt or being wound up, has his/her affairs administered by a court or a judicial officer, has suspended his/her business activities or is subject to legal proceedings in respect of any of the foregoing;
complies with the legal requirements, if any, stated in the tender data; and
is able, in the opinion of the employer, to perform the contract free of conflicts of interest.

Prepare contract documents

If necessary, revise documents that shall form part of the contract and that were issued by the employer as part of the tender documents to take account of:

addenda issued during the tender period,
inclusion of some of the returnable documents and
other revisions agreed between the employer and the successful tenderer.

Complete the schedule of deviations attached to the form of offer and acceptance, if any.

Complete adjudicator's contract

Unless alternative arrangements have been agreed or otherwise provided for in the contract, arrange for both parties to complete formalities for appointing the selected adjudicator at the same time as the main contract is signed.

Registration of the award

An employer must, within twenty-one (21) working days from the date on which a contractor's offer to perform a construction works contract is accepted in writing by the employer, register and publish the award on the cidb Register of Projects.

Provide copies of the contracts

Provide to the successful tenderer the number of copies stated in the Tender Data of the signed copy of the contract as soon as possible after completion and signing of the form of offer and acceptance.

Provide written reasons for actions taken

Provide upon request written reasons to tenderers for any action that is taken in applying these conditions of tender but withhold information which is not in the public interest to be divulged, which is considered to prejudice the legitimate commercial interests of tenderers or might prejudice fair competition between tenderers.

Confidential

AIRPORTS COMPANY SOUTH AFRICA

KING SHAKA INTERNATIONAL AIRPORT

TENDER REF. No: DIA6746/2021/RFP

REPLACEMENT OF THE FIRE DETECTION SYSTEM AT KING SHAKA INTERNATIONAL AIRPORT.

Part T2: Returnable Documents

T2.1: List of Returnable Document

The tenderer must complete the following returnable documents:	**Completed (tick)**
1 Returnable Schedules required for tender evaluation purposes only	
Certificate of Attendance at Briefing session	N/A
Record of Addenda to Tender Documents	
Certificate of Authority for Signatory	
Certificate of Authority for Joint Ventures (where applicable)	
Schedule of the Tenderer's Recent Experience related to this Project	
Completion Certificates of Previous Projects Completed	
Client reference letters on clients' letterhead of Previous work or similar Projects Completed	
Proof of Contract Values of Previous Projects Completed	
Schedule of Current Commitments	
SBD 4: Declaration of Interest	
SBD 6.1: Preference points claim form in terms of preferential procurement Regulations	
SBD 6.2 (Declaration for local content and production for PPPFA designated sectors	
SBD 8: Declaration of Bidder's past supply chain management practices	
SBD 9: Certificate of independent bid determination	
A15: Registration with the Department of Labour as a Lifting Machinery Entity	
2 Other documents required only for tender evaluation purposes	
Proof of registration for Contractor's WCA registration and or COID	
A certified copy of Certificate of Contractor Registration issued by the Construction Industry Development Board	
An original or certified copies valid Tax Clearance Certificate or SARS Pin issued by the South African Revenue Services.	
An original Bank Statement of good financial standing (Bank Rating) for the tender sum	
Central Supplier Database (CSD) proof of registration.	
3 Returnable Schedules required for tender evaluation purposes that will be incorporated into the contract	
C1.1 Form of Offer and Acceptance	
C1: Compulsory Enterprise Questionnaire	
C2: Schedule of Proposed Subcontractors	
C4: Subcontractor's Supporting Documents (Not Applicable)	
C5: Plant and Equipment	
C6: A certified copy of B-BBEE Verification Certificate	

Confidential

The tenderer must complete the following returnable documents:	Completed (tick)
C7: CV's of key personnel	
C8: Certified Certificates of Qualifications of Key Personnel.	
C10 Occupational Health and Safety Questionnaire	
C11 Schedule of Information to be provided by Tenderer	
C12 Proposed Amendments and Qualifications	
Letter of intent from OEM to supply reputable fire detection products	
Fire detection commissioning SAQCC registration	
ORHVS responsible person (competence certificate)	

REPLACEMENT OF THE FIRE DETECTION SYSTEM AT KING SHAKA INTERNATIONAL AIRPORT.

TENDER REF. No: DIA6746/2021/RFP

T2.2 Returnable Schedules

FORM A1. Certificate of Attendance of the Briefing Session (N/A)

This is to certify that

I, …….....

Representative of (tenderer)……

…….

of (address)……

……

……..

e-mail …….

telephone number …….

fax number……..

visited the compulsory brief session held on date……..

Signed		Date	
Name		Position	
Tenderer			

Signed by ACSA Representative:

Name: .....

Confidential

FORM A2. Record of Addenda to Tender Documents

We confirm that the following communications received from the Employer before the submission of this response for Tenders, amending the Tenders documents, have been taken into account in this response:		
	Date	**Title or Details**

Attach additional pages if more space is required.

Signed		Date	
Name		Position	
Tenderer			

Confidential

Form A3: Certificate of Authority for Signatory

Signatories for close corporations and companies shall confirm their authority by attaching to this form a duly signed and dated copy of the relevant resolution of their members or their board of directors, as the case may be.
In the event that the tenderer is a joint venture, a certificate of authority for signatories (Form A3) is required from all members of the joint venture and the designated lead member shall be clearly identified as requested by tender condition C2.13.4.

An example is shown below:

"By resolution of the board of directors taken on ..... 20.....

Mr/Ms .....

whose signature appear below, has been duly authorized to sign all documents in connection with this tender for Tender number **DIA6746/2021/RFP** and any contract which may arise there from on behalf of

(block capitals) .....

.....

Signed on behalf of Company: .....

In his/her capacity as: .....

Date:.....Signatory of Authority: ……..

Witnesses:

……..	……
Signature	Signature
……	……
Name (print)	Name (print)

Attach:
Latest Audited Annual Financial Report
Bank reference Letter

Signed		Date	
Name		Position	
Tenderer			

Confidential

FORM A4. Certificate of Authority of Joint Ventures (where applicable)

This Returnable Schedule is to be completed by joint ventures.

We, the undersigned, are submitting this tender offer in Joint Venture and hereby authorise Mr/Ms . . . . . , authorised signatory of the company . . . . . , acting in the capacity of lead partner, to sign all documents in connection with the tender offer and any contract resulting from it on our behalf.

Please attach JV agreement stipulation % share of each JV

NAME OF FIRM	ADDRESS	DULY AUTHORISED SIGNATORY
Lead partner		Signature: . . . . Name: ……... Designation: …….
		Signature: . . . . Name: ……... Designation: …….
		Signature: . . . . Name: ……... Designation: …….

Signed		**Date**	
Name		**Position**	
Tenderer			

FORM A5. Schedule of the Tenderer's Recent Experience

Bidders should very briefly describe his or her experience in this regard and attach this to this schedule. See format below

The description should be put in tabular form with the following headings:

Employer, contact person and telephone number	Principal Agent (Name, Tel No, Contact Person)	Description of works/ Project Name	Value of work inclusive of VAT (Rand)	Date started	Date completed	COMPLETION CERTIFICATE OR CLIENT REFERENCE LETTER	
						YES	NO

Note: When completing the above schedule, Tenderer's must take cognisance of the evaluation criteria as described in the Tender Data, Part T1.2, Clause C.3.11

The undersigned, who warrants that he / she is duly authorized to do so on behalf of the enterprise, confirms that the contents of this schedule are within my personal knowledge and are to the best of my belief both true and correct.

Signed		Date	
Name		Position	
Tenderer			

Confidential

FORM A6 Certified Copies of Completion Certificates of Previous Projects Completed

Please attach Completion Certificates (Practical Completion) of Previous Projects Completed as listed under Form A5 above to this page.
A minimum of two (2) certificates required for relevant projects.

The undersigned, who warrants that he / she is duly authorized to do so on behalf of the enterprise, confirms that the contents of this schedule are within my personal knowledge and are to the best of my belief both true and correct.

Signed		Date	
Name		Position	
Tenderer			

FORM A7 Certified Copies of Client Reference Letters of Previous Projects Completed

Please attach certified copies of Client Reference Letters of Previous Projects Completed as listed under Form A5 above to this page.
A minimum of two (2) reference letters required from the client bodies/Principal Agent.

The undersigned, who warrants that he / she is duly authorized to do so on behalf of the enterprise, confirms that the contents of this schedule are within my personal knowledge and are to the best of my belief both true and correct.

Signed		Date	
Name		Position	
Tenderer			

Confidential

Form A8 Proof of Contract Values of Previous Projects Completed

Please attach proof of Contract Values of Previous Projects Completed as listed under Form A5 above to this page. A minimum of two (2) certificates required for relevant projects.

The undersigned, who warrants that he / she is duly authorized to do so on behalf of the enterprise, confirms that the contents of this schedule are within my personal knowledge and are to the best of my belief both true and correct.

Signed		Date	
Name		Position	
Tenderer			

Confidential

Form A9: Schedule of Current Commitments

The tenderer shall list below all projects with which the proposed key personnel are currently involved In the event of a joint venture enterprise, details of all the members of the joint venture shall similarly be attached to this form

Employer, contact person and telephone number	Consultant/ Principal Agent, contact person and telephone number	Description of contract	Value of work inclusive of VAT (rand)	Completion Date

Signed		Date	
Name		Position	
Tenderer			

A10. DECLARATION OF INTEREST

1. Any legal person, including persons employed by the state[1], or persons having a kinship with persons employed by the state, including a blood relationship, may make an offer or offers in terms of this invitation to bid (includes a price quotation, advertised competitive bid, limited bid or proposal). In view of possible allegations of favouritism, should the resulting bid, or part thereof, be awarded to persons employed by the state, or to persons connected with or related to them, it is required that the bidder or his/her authorised representative declare his/her position in relation to the evaluating/adjudicating authority where-

- the bidder is employed by the state; and/or

- the legal person on whose behalf the bidding document is signed, has a relationship with persons/a person who are/is involved in the evaluation and or adjudication of the bid(s), or where it is known that such a relationship exists between the person or persons for or on whose behalf the declarant acts and persons who are involved with the evaluation and or adjudication of the bid.

2. **In order to give effect to the above, the following questionnaire must be completed and submitted with the bid.**

2.1 Full Name of bidder or his or her representative: …….

Identity Number: ……

Position occupied in the Company (director, trustee, shareholder[2]): ……..

Company Registration Number: ……..…….

Tax Reference Number: …….……

VAT Registration Number: ……....

2.6.1 The names of all directors / trustees / shareholders / members, their individual identity numbers, tax reference numbers and, if applicable, employee / persal numbers must be indicated in paragraph 3 below.

[1]"State" means –

(a) any national or provincial department, national or provincial public entity or constitutional institution within the meaning of the Public Finance Management Act, 1999 (Act No. 1 of 1999);

(b) any municipality or municipal entity;

(c) provincial legislature;

(d) national Assembly or the national Council of provinces; or

(e) Parliament.

[2]"Shareholder" means a person who owns shares in the company and is actively involved in the management of the enterprise or business and exercises control over the enterprise.

2.7 Are you or any person connected with the bidder presently employed by the state? **YES / NO**

If so, furnish the following particulars:

Name of person / director / trustee / shareholder/ member: ……..……

Name of state institution at which you or the person connected to the bidder is employed : ……

Position occupied in the state institution: ……

Any other particulars:
……

……
……

If you are presently employed by the state, did you obtain the appropriate authority to undertake remunerative work outside employment in the public sector? **YES / NO**

If yes, did you attached proof of such authority to the bid document? **YES / NO**

(Note: Failure to submit proof of such authority, where applicable, may result in the disqualification of the bid.

If no, furnish reasons for non-submission of such proof:

…….
…….
…….

Did you or your spouse, or any of the company's directors / trustees / shareholders / members or their spouses conduct business with the state in the previous twelve months? **YES / NO**

If so, furnish particulars:
……..
……..
……...

Do you, or any person connected with the bidder, have any relationship (family, friend, other) with a person employed by the state and who may be involved with the evaluation and or adjudication of this bid? **YES / NO**

2.9.1If so, furnish particulars.

……...
……..….
……

Confidential

2.10 Are you, or any person connected with the bidder, aware of any relationship (family, friend, other) between any other bidder and any person employed by the state who may be involved with the evaluation and or adjudication of this bid? **YES/NO**

2.10.1 If so, furnish particulars**.**
……
……
……

2.11 Do you or any of the directors / trustees / shareholders / members of the company have any interest in any other related companies whether or not they are bidding for this contract? **YES/NO**

2.11.1 If so, furnish particulars:
…….
…….
…….

Full details of directors / trustees / members / shareholders.

Full Name	**Identity Number**	**Personal Tax Reference Number**	**State Employee Number / Persal Number**

4 DECLARATION

I, THE UNDERSIGNED (NAME)……

CERTIFY THAT THE INFORMATION FURNISHED IN PARAGRAPHS 2 and 3 ABOVE IS CORRECT.
I ACCEPT THAT THE STATE MAY REJECT THE BID OR ACT AGAINST ME IN TERMS OF PARAGRAPH 23 OF THE GENERAL CONDITIONS OF CONTRACT SHOULD THIS DECLARATION PROVE TO BE FALSE.

…….. ..……
Signature Date

……. ……
Position Name of bidder

Confidential

SBD 6.1

A11. PREFERENCE POINTS CLAIM FORM IN TERMS OF THE PREFERENTIAL PROCUREMENT REGULATIONS 2017

This preference form must form part of all bids invited. It contains general information and serves as a claim form for preference points for Broad-Based Black Economic Empowerment (B-BBEE) Status Level of Contribution

NB: BEFORE COMPLETING THIS FORM, BIDDERS MUST STUDY THE GENERAL CONDITIONS, DEFINITIONS AND DIRECTIVES APPLICABLE IN RESPECT OF B-BBEE, AS PRESCRIBED IN THE PREFERENTIAL PROCUREMENT REGULATIONS, 2017.

GENERAL CONDITIONS

The following preference point systems are applicable to all bids:

the 80/20 system for requirements with a Rand value of up to R50 000 000 (all applicable taxes included); and
the 90/10 system for requirements with a Rand value above R50 000 000 (all applicable taxes included).

a) The value of this bid is estimated to exceed R50 000 000 (all applicable taxes included) and therefore the 90/10 preference point system shall be applicable; or

b) The 90/10 preference point system will be applicable to this tender

Points for this bid shall be awarded for:

Price; and

B-BBEE Status Level of Contributor.

The maximum points for this bid are allocated as follows:

	POINTS
PRICE	**90**
B-BBEE STATUS LEVEL OF CONTRIBUTOR	**10**
Total points for Price and B-BBEE must not exceed	**100**

Failure on the part of a bidder to submit proof of B-BBEE Status level of contributor together with the bid, will be interpreted to mean that preference points for B-BBEE status level of contribution are not claimed.

The purchaser reserves the right to require of a bidder, either before a bid is adjudicated or at any time subsequently, to substantiate any claim in regard to preferences, in any manner required by the purchaser.

DEFINITIONS

"B-BBEE" means broad-based black economic empowerment as defined in section 1 of the Broad-Based Black Economic Empowerment Act;

"**B-BBEE status level of contributor"** means the B-BBEE status of an entity in terms of a code of good practice on black economic empowerment, issued in terms of section 9(1) of the Broad-Based Black Economic Empowerment Act;

"bid" means a written offer in a prescribed or stipulated form in response to an invitation by an organ of state for the provision of goods or services, through price quotations, advertised competitive bidding processes or proposals;

"Broad-Based Black Economic Empowerment Act" means the Broad-Based Black Economic Empowerment Act, 2003 (Act No. 53 of 2003);

"EME" means an Exempted Micro Enterprise in terms of a code of good practice on black economic empowerment issued in terms of section 9 (1) of the Broad-Based Black Economic Empowerment Act;

"functionality" means the ability of a tenderer to provide goods or services in accordance with specifications as set out in the tender documents.

"prices" includes all applicable taxes less all unconditional discounts;

"proof of B-BBEE status level of contributor" means:

B-BBEE Status level certificate issued by an authorized body or person;

A sworn affidavit as prescribed by the B-BBEE Codes of Good Practice;

Any other requirement prescribed in terms of the B-BBEE Act;

"QSE" means a qualifying small business enterprise in terms of a code of good practice on black economic empowerment issued in terms of section 9 (1) of the Broad-Based Black Economic Empowerment Act;

"rand value" means the total estimated value of a contract in Rand, calculated at the time of bid invitation, and includes all applicable taxes;

POINTS AWARDED FOR PRICE

THE 80/20 OR 90/10 PREFERENCE POINT SYSTEMS

A maximum of 80 or 90 points is allocated for price on the following basis:

80/20 **or** **90/10**

$$Ps = 80\left(1 - \frac{Pt - P\min}{P\min}\right) \quad \text{or} \quad Ps = 90\left(1 - \frac{Pt - P\min}{P\min}\right)$$

Where

Ps = Points scored for price of bid under consideration

Pt = Price of bid under consideration

Pmin = Price of lowest acceptable bid

POINTS AWARDED FOR B-BBEE STATUS LEVEL OF CONTRIBUTOR

In terms of Regulation 6 (2) and 7 (2) of the Preferential Procurement Regulations, preference points must be awarded to a bidder for attaining the B-BBEE status level of contribution in accordance with the table below:

B-BBEE Status Level of Contributor	Number of points (90/10 system)	Number of points (80/20 system)
1	10	20
2	9	18
3	6	14
4	5	12
5	4	8
6	3	6
7	2	4
8	1	2
Non-compliant contributor	0	0

BID DECLARATION

Bidders who claim points in respect of B-BBEE Status Level of Contribution must complete the following:

B-BBEE STATUS LEVEL OF CONTRIBUTOR CLAIMED IN TERMS OF PARAGRAPHS 1.4 AND 4.1

B-BBEE Status Level of Contributor: . = ……(maximum of 10 or 20 points)

(Points claimed in respect of paragraph 7.1 must be in accordance with the table reflected in paragraph 4.1 and must be substantiated by relevant proof of B-BBEE status level of contributor.

SUB-CONTRACTING

Will any portion of the contract be sub-contracted?

(***Tick applicable box***)

YES		NO	

If yes, indicate:

What percentage of the contract will be subcontracted.....…….……%
The name of the sub-contractor……..
The B-BBEE status level of the sub-contractor.....……..
Whether the sub-contractor is an EME or QSE
(Tick applicable box)

YES		NO	

Specify, by ticking the appropriate box, if subcontracting with an enterprise in terms of Preferential Procurement Regulations,2017:

Designated Group: An EME or QSE which is at last 51% owned by:	**EME** √	**QSE** √
Black people		
Black people who are youth		
Black people who are women		
Black people with disabilities		
Black people living in rural or underdeveloped areas or townships		
Cooperative owned by black people		
Black people who are military veterans		
OR		
Any EME		
Any QSE		

Confidential

DECLARATION WITH REGARD TO COMPANY/FIRM

Name of company/firm:…….

VAT registration number:……..……

Company registration number:……..……..…….

TYPE OF COMPANY/ FIRM

- ☐ Partnership/Joint Venture / Consortium
- ☐ One person business/sole propriety
- ☐ Close corporation
- ☐ Company
- ☐ (Pty) Limited

[TICK APPLICABLE BOX]

DESCRIBE PRINCIPAL BUSINESS ACTIVITIES

……
……
……
……..

COMPANY CLASSIFICATION

- ☐ Manufacturer
- ☐ Supplier
- ☐ Professional service provider
- ☐ Other service providers, e.g. transporter, etc.

[*TICK APPLICABLE BOX*]

Total number of years the company/firm has been in business:……

I/we, the undersigned, who is / are duly authorised to do so on behalf of the company/firm, certify that the points claimed, based on the B-BBEE status level of contributor indicated in paragraphs 1.4 and 6.1 of the foregoing certificate, qualifies the company/ firm for the preference(s) shown and I / we acknowledge that:

The information furnished is true and correct;

The preference points claimed are in accordance with the General Conditions as indicated in paragraph 1 of this form;

In the event of a contract being awarded as a result of points claimed as shown in paragraphs 1.4 and 6.1, the contractor may be required to furnish documentary proof to the satisfaction of the purchaser that the claims are correct;

If the B-BBEE status level of contributor has been claimed or obtained on a fraudulent basis or any of the conditions of contract have not been fulfilled, the purchaser may, in addition to any other remedy it may have –

disqualify the person from the bidding process;

recover costs, losses or damages it has incurred or suffered as a result of that person's

Confidential

conduct;

cancel the contract and claim any damages which it has suffered as a result of having to make less favourable arrangements due to such cancellation;

recommend that the bidder or contractor, its shareholders and directors, or only the shareholders and directors who acted on a fraudulent basis, be restricted by the National Treasury from obtaining business from any organ of state for a period not exceeding 10 years, after the *audi alteram partem* (hear the other side) rule has been applied; and

forward the matter for criminal prosecution.

WITNESSES 1. …….. 2. ……	…… SIGNATURE(S) OF BIDDERS(S) DATE: …….. ADDRESS …….. …….. ……..

Confidential

SBD 6.2

A12 DECLARATION CERTIFICATE FOR LOCAL PRODUCTION AND CONTENT FOR DESIGNATED SECTORS

This Standard Bidding Document (SBD) must form part of all bids invited. It contains general information and serves as a declaration form for local content (local production and local content are used interchangeably).

Before completing this declaration, bidders must study the General Conditions, Definitions, Directives applicable in respect of Local Content as prescribed in the Preferential Procurement Regulations, 2017, the South African Bureau of Standards (SABS) approved technical specification number SATS 1286:2011 (Edition 1) and the Guidance on the Calculation of Local Content together with the Local Content Declaration Templates [Annex C (Local Content Declaration: Summary Schedule), D (Imported Content Declaration: Supporting Schedule to Annex C) and E (Local Content Declaration: Supporting Schedule to Annex C)].

General Conditions

Preferential Procurement Regulations, 2017 (Regulation 8) make provision for the promotion of local production and content.

Regulation 8.(2) prescribes that in the case of designated sectors, organs of state must advertise such tenders with the specific bidding condition that only locally produced or manufactured goods, with a stipulated minimum threshold for local production and content will be considered.

Where necessary, for tenders referred to in paragraph 1.2 above, a two stage bidding process may be followed, where the first stage involves a minimum threshold for local production and content and the second stage price and B-BBEE.

A person awarded a contract in relation to a designated sector, may not sub-contract in such a manner that the local production and content of the overall value of the contract is reduced to below the stipulated minimum threshold.

The local content (LC) expressed as a percentage of the bid price must be calculated in accordance with the SABS approved technical specification number SATS 1286: 2011 as follows:

$$LC = [1 - x / y] * 100$$

Where

x is the imported content in Rand
y is the bid price in Rand excluding value added tax (VAT)

Prices referred to in the determination of x must be converted to Rand (ZAR) by using the exchange rate published by South African Reserve Bank (SARB) at 12:00 on the date of advertisement of the bid as indicated in paragraph 4.1 below.

The SABS approved technical specification number SATS 1286:2011 is accessible on http:/www.thedti.gov.za/industrial development/ip.jsp at no cost.

A bid may be disqualified if this Declaration Certificate and the Annex C (Local Content Declaration: Summary Schedule) are not submitted as part of the bid documentation;

The stipulated minimum threshold(s) for local production and content (refer to Annex A of SATS 1286:2011) for this bid is/are as follows:

Description of services, works or goods Stipulated minimum threshold

3. Does any portion of the goods or services offered have any imported content?
(***Tick applicable box***)

YES		NO	

3..1 If yes, the rate(s) of exchange to be used in this bid to calculate the local content as prescribed in paragraph 1.5 of the general conditions must be the rate(s) published by SARB for the specific currency at 12:00 on the date of advertisement of the bid.

The relevant rates of exchange information is accessible on www.reservebank.co.za

Indicate the rate(s) of exchange against the appropriate currency in the table below (refer to Annex A of SATS 1286:2011):

Currency	**Rates of exchange**
US Dollar	
Pound Sterling	
Euro	
Yen	
Other	

NB: Bidders must submit proof of the SARB rate (s) of exchange used.

Where, after the award of a bid, challenges are experienced in meeting the stipulated minimum threshold for local content the dti must be informed accordingly in order for the dti to verify and in consultation with the AO/AA provide directives in this regard.

LOCAL CONTENT DECLARATION
(REFER TO ANNEX B OF SATS 1286:2011)

LOCAL CONTENT DECLARATION BY CHIEF FINANCIAL OFFICER OR OTHER LEGALLY RESPONSIBLE PERSON NOMINATED IN WRITING BY THE CHIEF EXECUTIVE OR SENIOR MEMBER/PERSON WITH MANAGEMENT RESPONSIBILITY (CLOSE CORPORATION, PARTNERSHIP OR INDIVIDUAL)

IN RESPECT OF BID NO. .....

ISSUED BY: (Procurement Authority / Name of Institution): .....
NB

Confidential

The obligation to complete, duly sign and submit this declaration cannot be transferred to an external authorized representative, auditor or any other third party acting on behalf of the bidder.

Guidance on the Calculation of Local Content together with Local Content Declaration Templates (Annex C, D and E) is accessible on http://www.thdti.gov.za/industrial development/ip.jsp. Bidders should first complete Declaration D. After completing Declaration D, bidders should complete Declaration E and then consolidate the information on Declaration C. **Declaration C should be submitted with the bid documentation at the closing date and time of the bid in order to substantiate the declaration made in paragraph (c) below.** Declarations D and E should be kept by the bidders for verification purposes for a period of at least 5 years. The successful bidder is required to continuously update Declarations C, D and E with the actual values for the duration of the contract.

I, the undersigned, ……..... (full names),
do hereby declare, in my capacity as …… ……..
of .....(name of bidder entity), the following:

The facts contained herein are within my own personal knowledge.

I have satisfied myself that:

the goods/services/works to be delivered in terms of the above-specified bid comply with the minimum local content requirements as specified in the bid, and as measured in terms of SATS 1286:2011; and

The local content percentage (%) indicated below has been calculated using the formula given in clause 3 of SATS 1286:2011, the rates of exchange indicated in paragraph 4.1 above and the information contained in Declaration D and E which has been consolidated in Declaration C:

Bid price, excluding VAT (y)	R
Imported content (x), as calculated in terms of SATS 1286:2011	R
Stipulated minimum threshold for local content (paragraph 3 above)	
Local content %, as calculated in terms of SATS 1286:2011	

If the bid is for more than one product, the local content percentages for each product contained in Declaration C shall be used instead of the table above.
The local content percentages for each product has been calculated using the formula given in clause 3 of SATS 1286:2011, the rates of exchange indicated in paragraph 4.1 above and the information contained in Declaration D and E.

I accept that the Procurement Authority / Institution has the right to request that the local content be verified in terms of the requirements of SATS 1286:2011.

I understand that the awarding of the bid is dependent on the accuracy of the information furnished in this application. I also understand that the submission of incorrect data, or data that are not verifiable as described in SATS 1286:2011, may result in the Procurement Authority / Institution imposing any or all of the remedies as provided for in Regulation 14 of the Preferential Procurement Regulations, 2017 promulgated under the Preferential Policy Framework Act (PPPFA), 2000 (Act No. 5 of 2000).

SIGNATURE: _____ **DATE:** _____

WITNESS No. 1 _____ **DATE:** _____

WITNESS No. 2 _____ **DATE:** _____

SBD 8

A13 DECLARATION OF BIDDER'S PAST SUPPLY CHAIN MANAGEMENT PRACTICES

This Standard Bidding Document must form part of all bids invited.

It serves as a declaration to be used by institutions in ensuring that when goods and services are being procured, all reasonable steps are taken to combat the abuse of the supply chain management system.

The bid of any bidder may be disregarded if that bidder, or any of its directors have-

abused the institution's supply chain management system;
committed fraud or any other improper conduct in relation to such system; or
failed to perform on any previous contract.

In order to give effect to the above, the following questionnaire must be completed and submitted with the bid.

Item	Question	Yes	No
4.1	Is the bidder or any of its directors listed on the National Treasury's Database of Restricted Suppliers as companies or persons prohibited from doing business with the public sector? **(Companies or persons who are listed on this Database were informed in writing of this restriction by the Accounting Officer/Authority of the institution that imposed the restriction after the *audi alteram partem* rule was applied).** The Database of Restricted Suppliers now resides on the National Treasury's website(**www.treasury.gov.za**) and can be accessed by clicking on its link at the bottom of the home page.	Yes ☐	No ☐
4.1.1	If so, furnish particulars:		
4.2	Is the bidder or any of its directors listed on the Register for Tender Defaulters in terms of section 29 of the Prevention and Combating of Corrupt Activities Act (No 12 of 2004)? **The Register for Tender Defaulters can be accessed on the National Treasury's website (www.treasury.gov.za) by clicking on its link at the bottom of the home page.**	Yes ☐	No ☐
4.2.1	If so, furnish particulars:		
4.3	Was the bidder or any of its directors convicted by a court of law (including a court outside of the Republic of South Africa) for fraud or corruption during the past five years?	Yes ☐	No ☐

4.3.1	If so, furnish particulars:		
4.4	Was any contract between the bidder and any organ of state terminated during the past five years on account of failure to perform on or comply with the contract?	Yes ☐	No ☐
4.4.1	If so, furnish particulars:		

CERTIFICATION

I, THE UNDERSIGNED (FULL NAME)…… CERTIFY THAT THE INFORMATION FURNISHED ON THIS DECLARATION FORM IS TRUE AND CORRECT.

I ACCEPT THAT, IN ADDITION TO CANCELLATION OF A CONTRACT, ACTION MAY BE TAKEN AGAINST ME SHOULD THIS DECLARATION PROVE TO BE FALSE.

……... **……..**
Signature **Date**

……. **……..**
Position **Name of Bidder**

Confidential

SBD 9
A14 CERTIFICATE OF INDEPENDENT BID DETERMINATION

1 This Standard Bidding Document (SBD) must form part of all bids[1] invited.

2 Section 4 (1) (b) (iii) of the Competition Act No. 89 of 1998, as amended, prohibits an agreement between, or concerted practice by, firms, or a decision by an association of firms, if it is between parties in a horizontal relationship and if it involves collusive bidding (or bid rigging).[2] Collusive bidding is a *pe se* prohibition meaning that it cannot be justified under any grounds.

3 Treasury Regulation 16A9 prescribes that accounting officers and accounting authorities must take all reasonable steps to prevent abuse of the supply chain management system and authorizes accounting officers and accounting authorities to:

a. disregard the bid of any bidder if that bidder, or any of its directors have abused the institution's supply chain management system and or committed fraud or any other improper conduct in relation to such system.

b. cancel a contract awarded to a supplier of goods and services if the supplier committed any corrupt or fraudulent act during the bidding process or the execution of that contract.

This SBD serves as a certificate of declaration that would be used by institutions to ensure that, when bids are considered, reasonable steps are taken to prevent any form of bid-rigging.

In order to give effect to the above, the attached Certificate of Bid Determination (SBD 9) must be completed and submitted with the bid:

[1] Includes price quotations, advertised competitive bids, limited bids and proposals.

[2] Bid rigging (or collusive bidding) occurs when businesses, that would otherwise be expected to compete, secretly conspire to raise prices or lower the quality of goods and / or services for purchasers who wish to acquire goods and / or services through a bidding process. Bid rigging is, therefore, an agreement between competitors not to compete

Confidential

SBD 9

CERTIFICATE OF INDEPENDENT BID DETERMINATION

I, the undersigned, in submitting the accompanying bid:

_____

(Bid Number and Description)

in response to the invitation for the bid made by:

_____

(Name of Institution)

do hereby make the following statements that I certify to be true and complete in every respect:

I certify, on behalf of:_____that:
(Name of Bidder)
I have read and I understand the contents of this Certificate;
I understand that the accompanying bid will be disqualified if this Certificate is found not to be true and complete in every respect;
I am authorized by the bidder to sign this Certificate, and to submit the accompanying bid, on behalf of the bidder;
Each person whose signature appears on the accompanying bid has been authorized by the bidder to determine the terms of, and to sign the bid, on behalf of the bidder;
For the purposes of this Certificate and the accompanying bid, I understand that the word "competitor" shall include any individual or organization, other than the bidder, whether or not affiliated with the bidder, who:

(a) has been requested to submit a bid in response to this bid invitation;
(b) could potentially submit a bid in response to this bid invitation, based on their qualifications, abilities or experience; and
(c) provides the same goods and services as the bidder and/or is in the same line of business as the bidder

Confidential

The bidder has arrived at the accompanying bid independently from, and without consultation, communication, agreement or arrangement with any competitor. However, communication between partners in a joint venture or consortium[3] will not be construed as collusive bidding.

In particular, without limiting the generality of paragraphs 6 above, there has been no consultation, communication, agreement or arrangement with any competitor regarding:

prices;

geographical area where product or service will be rendered (market allocation)

(c) methods, factors or formulas used to calculate prices;

(d) the intention or decision to submit or not to submit, a bid;

(e) the submission of a bid which does not meet the specifications and conditions of the bid; or

(f) bidding with the intention not to win the bid.

In addition, there have been no consultations, communications, agreements or arrangements with any competitor regarding the quality, quantity, specifications and conditions or delivery particulars of the products or services to which this bid invitation relates.

The terms of the accompanying bid have not been, and will not be, disclosed by the bidder, directly or indirectly, to any competitor, prior to the date and time of the official bid opening or of the awarding of the contract.

[3] Joint venture or Consortium means an association of persons for the purpose of combining their expertise, property, capital, efforts, skill and knowledge in an activity for the execution of a contract.

SBD 9

I am aware that, in addition and without prejudice to any other remedy provided to combat any restrictive practices related to bids and contracts, bids that are suspicious will be reported to the Competition Commission for investigation and possible imposition of administrative penalties in terms of section 59 of the Competition Act No 89 of 1998 and or may be reported to the National Prosecuting Authority (NPA) for criminal investigation and or may be restricted from conducting business with the public sector for a period not exceeding ten (10) years in terms of the Prevention and Combating of Corrupt Activities Act No 12 of 2004 or any other applicable legislation.

…… ……

Signature Date

…… ……

Position Name of Bidder

Js914w 2

Confidential

Form B1 to Form B5: Certificates

Attach the following Certificates to this page:

B1: Proof of registration for Contractor's WCA registration or COID

B2: An original Certificate of Contractor Registration issued by the Construction Industry Development Board (CIDB)

B3: An original or certified Tax Clearance Certificate issued by the South African Revenue Services. In the event of a Joint Venture, each member shall comply with this requirement.

B4: An original Bank Statement of good financial standing. (This document shall include a Bank Rating for the tender sum as indicated below)

B5: Central Supplier Database (CSD) proof of registration with Supplier number (MAAA) and Unique registration number

B6: Proof of Registration with the Department of Labour as a Lifting Machinery Entity

Bank Report on : *(Tenderers Name)*
Account No :
Bank :
Branch Code :
Amount : *(Tender Value)*
Duration : XX *months (*excluding special non-working days)

BUSINESS POTENTIAL CODE (MARK X AGAINST APPLICABLE CLASSIFICATION)

( ) A UNDOUBTED FOR INQUIRY
( ) B GOOD FOR AMOUNT QUOTED
( ) C GOOD FOR AMOUNT QUOTED IF STRICTLY IN WAY OF BUSINESS
( ) D FAIR TRADE RISK
( ) E FIGURE CONSIDER TOO HIGH
( ) F FINANCIAL POSITION UNKNOWN
( ) G OCCASIONALLY DISHONOURED
( ) H FREQUENTLY DISHONOURED

Confidential

Form C1: Compulsory Enterprise Questionnaire

The following particulars must be furnished. In the case of a joint venture, separate enterprise questionnaires in respect of each partner must be completed and submitted.
Section 1: Name of enterprise:
Section 2: VAT registration number, if any:
Section 3: CIDB registration number, if any:
Section 4: CSD number:
Section 5: Particulars of sole proprietors and partners in partnerships: ***** *Complete only if sole proprietor or partnership and attach separate page if more than 3 partners*
Section 6: Particulars of companies and close corporations
Company registration number:
Close corporation number:
Tax reference number:
Section 7: SBD4 issued by National Treasury must be completed for each tender and be attached as a tender requirement.
Section 8: SBD 6 issued by National Treasury must be completed for each tender and be attached as a tender requirement.
Section 9: SBD8 issued by National Treasury must be completed for each tender and be attached as a tender requirement.
Section 10: SBD9 issued by National Treasury must be completed for each tender and be attached as a tender requirement.
The undersigned, who warrants that he / she is duly authorised to do so on behalf of the enterprise: authorizes the employer to verify the tenderers tax clearance status from the South African Revenue Services that it is in order; confirms that the neither the name of the enterprise or the name of any partner, manager, director or other person, who wholly or partly exercises or may exercise, control over the enterprise appears on the Register of Tender Defaulters established in terms of the Prevention and Combating of Corrupt Activities Act of 2004; confirms that no partner, member, director or other person, who wholly or partly exercises, or may exercise, control over the enterprise appears, has within the last five years been convicted of fraud or corruption; confirms that I / we are not associated, linked or involved with any other tendering entities submitting tender offers and have no other relationship with any of the tenderers or those responsible for compiling the scope of work that could cause or be interpreted as a conflict of interest; and iv) confirms that the contents of this questionnaire are within my personal knowledge and are to the best of my belief both true and correct.

Signed		Date	
Name		Position	
Enterprise name			

Form C5: Plant and Equipment

The following are lists of major items of relevant equipment that I/we presently own or lease and will have available for this contract or will acquire or hire for this contract if my/our tender is accepted.

(a) Details of major equipment that is owned by and immediately available for this contract.

Quantity	Description, size, capacity, etc.

Attach additional pages if more space is required.

(b) Details of major equipment that will be hired, or acquired for this contract if my/our tender is acceptable.

Quantity	Description, size, capacity, etc.

Attach additional pages if more space is required.

Signed		Date	
Name		Position	
Tenderer			

FORM C6: A certified copy of B-BBEE Verification Certificate

Valuation of preference points is based on tenderer's B-BBEE verification certificate:

The certificate shall have been issued by:
A verification agency accredited by South African National Accreditation System (SANAS);
ii. A registered auditor approved by the Independent Regulatory Board of Auditors (IRBA);
The verification certificate must be valid at the tender closing date
Failure to submit a valid verification certificate will result in the award of zero (0) points for preference.

In the invent of a Joint Venture (JV), a consolidated B-BBEE verification certificate in the name of the JV shall be submitted.

The verification certificate shall identify:
The name and *domicilium citandi et executandi* of the tenderer
The registration and VAT number of the tenderer
The dates of granting of the B-BBEE score and the period of validity
The expiry date of the verification certificate
A unique identification number

The standard and/or normative document, including the issue and/or revision used to evaluate the tenderer:

The name and/or mark/logo of the B-BBEE verification agency.
The scorecard (GENERIC, QSE, EME) against which the tenderer has been verified.
The B-BBEE status level
The SANAS or IRBA logo on the verification certificate.
The B-BBEE procurement recognition level.
The score achieved per B-BBEE element.
The % black shareholding.
The % black woman shareholding.
The % black persons with disabilities.

ACSA will not be responsible to acquire data that it needs for its own reporting systems and which may not form part of a verification agency's standard certificate format. The tenderer, at its own cost, must acquire the specified data listed in 3 above from its selected verification agency and have it recorded on the certificate.

Alternatively, such missing data must be supplied separately, but certified as correct by the same verification agency and also submitted. Failure to abide by this requirement will result in such a tenderer scoring zero (0) preference.

Signed		Date	
Name		Position	
Tenderer			

FORM C7. The CV's of key personnel

Bidders are referred to **clause C.3.11** which indicates the maximum possible score for information requested under this schedule.

Bidders are required to demonstrate the following:

- **Composition of team structure** including roles & responsibilities and time allocation (i.e. full time vs part time)

- Qualifications and Demonstrated Experience of key personnel in relevant projects (similar size, nature & complexity). As the work to be carried out in this tender is of a technically complex nature, it is essential that suitably qualified and experienced personnel be assigned to this project.

As a minimum key team members as stated below need to be allocated to the project serving in a full time capacity covering the following key competencies. (i.e. 1 competency per team member). The key team needs to be represented by a Project Director (who does not necessarily need to be full time on the site):

Contracts Manager
Installer
Cabler

The evaluation of quality will be based on the **CV's submitted and organogram of proposed team. Bidders are to complete returnable CV templates and attach full detailed CV thereto**

Confidential

Contracts Manager

Name:	
Date of Birth:	
Current Employer:	
Job Description and Qualifications:	
Relevant Years' Experience	

Key experience in relevant works: It is to be noted that 'relevant projects' refers to liquid petroleum facilities.

Project 1 Name:
Start:
Completion:
Client:
Outline of Responsibilities and Duties:

Project 2 Name:
Start:
Completion:
Client:
Outline of Responsibilities and Duties:

Project 3 Name:
Start:
Completion:
Client:
Outline of Responsibilities and Duties:

Note: When completing the above schedule, Tenderer's must be cognisant of the evaluation criteria as described in the Tender Data, Part T1.2, Clause C3.11

Commitment to the Project

The undersigned commits himself / herself to the overall project. He/she does not intend to cancel his/her contract or to leave the company which employs him/her within the overall duration of this project. Should the person stated above not be available for the Contract (for a *bona fide* reason), a person of at least the same experience and qualifications will need to be submitted for approval prior to taking up the position.

Confidential

Installer

Name:	
Date of Birth:	
Current Employer:	
Job Description and Qualifications:	
Relevant Years' Experience	

Key experience in relevant projects: It is to be noted that 'relevant projects' refers to liquid petroleum facilities.

Project 1 Name:
Start:
Completion:
Client:
Outline of Responsibilities and Duties:

Project 2 Name:
Start:
Completion:
Client:
Outline of Responsibilities and Duties:

Project 3 Name:
Start:
Completion:
Client:
Outline of Responsibilities and Duties:

Note: When completing the above schedule, Tenderer's must be cognisant of the evaluation criteria as described in the Tender Data, Clause C3.11

Commitment to the Project
The undersigned commits himself / herself to the overall project. He/she does not intend to cancel his/her contract or to leave the company which employs him/her within the overall duration of this project. Should the person stated above not be available for the Contract (for a *bona fide* reason), a person of at least the same experience and qualifications will need to be submitted for approval prior to taking up the position.

Cabler

Name:	
Date of Birth:	
Current Employer:	
Job Description and Qualifications:	
Relevant Years' Experience	

Key experience in relevant projects: It is to be noted that 'relevant projects' refers to liquid petroleum facilities.

Project 1 Name:
Start:
Completion:
Client:
Outline of Responsibilities and Duties:

Project 2 Name:
Start:
Completion:
Client:
Outline of Responsibilities and Duties:

Project 3 Name:
Start:
Completion:
Client:
Outline of Responsibilities and Duties:

Note: When completing the above schedule, Tenderer's must be cognisant of the evaluation criteria as described in the Tender Data, Clause C3.11

Commitment to the Project
The undersigned commits himself / herself to the overall project. He/she does not intend to cancel his/her contract or to leave the company which employs him/her within the overall duration of this project. Should the person stated above not be available for the Contract (for a *bona fide* reason), a person of at least the same experience and qualifications will need to be submitted for approval prior to taking up the position.

FORM C8: Certified Certificates of Qualifications of Key Personnel.

Please attach certified copies of Qualifications of Key Personnel as listed under Form C7 above to this page.

Signed		Date	
Name		Position	
Tenderer			

Form C10. Occupational Health and Safety Questionnaire

1.	SHE POLICY, ORGANISATION AND MANAGEMENT INVOLVEMENT	YES	NO
1.1	Do you have a SHE Policy?		
	Is this signed by the senior executive?		
	Please supply copy of this policy		
1.2	Does a She structure exist in your company?		
	Please provide details		
1.3	Are senior and middle management actively involved in the promotions of SHE?		
	Please provide details e.g.		
	Periodical work area inspection		
	Regular Health and Safety meetings with personnel		
1.4	Are the SHE responsibilities of managers clearly defined?		
	Please provide details		
1.5	Are annual SHE objectives included in your business plan?		
	Please provide example		
1.6	Is your company registered with the Compensation Commissioner? (COID Act)?		
	If so, please provide registration number		
1.7	Do you have a copy of good standing certificate, confirming that your registration is paid up?		
	If so, please provide copy thereof		
2.	**SHE TRAINING**	**YES**	**NO**
2.1	Is training provided to employees at the following stages?		
	When joining the company		
	When changing jobs within the company		
	When new plant or equipment needs to be operated		
	As a result of experience of and feedback from an accident/ incident reports		
	Are you able to provide proof of specialist training provided?		
	Please state how this can be achieved		
2.2	What formal SHE training is provided specifically to		
	First line supervisors		
	Middle and top management		
	Please describe		
2.3	Are all employees (including sub-contractors) instructed as to the application of rules and regulations?		
	When is this done and how is it achieved?		
2.4	Does this training include the selection, use and care of personal protective equipment?		
2.5	What refresher training is provided and at what intervals?		
	Please list examples		

	Course Title	Target audience	Interval		
2.6	Has the person(s) allocated as your SHE advisor followed specific SHE training?				
	Please list most recent courses				
	Does this include refresher training?				
3.	**PURCHASE OF GOODS, MATERIALS AND SERVICES**			**YES**	**NO**
3.1	Do you have a system for establishing SHE specifications as part of the assessment of goods, materials and services?				
	Please describe				
3.2	Do you have a system which ensures that all statutory inspection of plant and equipment are carried out?				
	Please give examples of plant /equipment covered				
3.3	Is there record of inspection?				
	Where is it kept?				
	Are you able to supply copies of these inspection records if required?				
3.4	How is plant and equipment, which has been inspected identifies as being safe to use?				
3.5	Do you evaluate the SHE competence of all sub-contractors?				
	Please describe how this is achieved and how the results are monitored				
4.	**SHE INSPECTIONS**			**YES**	**NO**
4.1	Are periodic work inspections carried out by first line supervisors or your General Safety Regulation 11(1) appointee?				
4.2	Are records of these inspections kept and available?				
4.3	During the inspections are supervisors required to check that safety rules and regulations (including personal protective equipment) are adhered to?				
4.4	Are unsafe acts and conditions reported and remedial actions formally monitored?				
	Please provide examples of the above				
5.	**RULES AND REGULATIONS**			**YES**	**NO**
5.1	Do health and safety rules and regulations exist for personnel and sub-contractors?				
	Do these cover				
	General rules				
	Project rules				
	Specific task rules				
5.2	Do these rules include permit to work system (as applicable)				
5.3	Do you have experience of project SHE plans?				
	Please give examples of where these have been used				

5.4	Do you have a formal company guideline for holding pre-contract health and safety meetings with the client?		
6	**RISK MANAGEMENT**	**YES**	**NO**
6.1	Have the following, involved in the execution of your work, been identified?		
	Hazards affecting health and safety?		
	The groups of people who might be affected?		
	An evaluation of the risk from each significant hazard?		
	Whether the risks arising are adequately controlled?		
6.2	Are these findings and assessments recorded?		
6.3	How often are they reviewed?		
	Please list the time frame e.g. years		
6.4	For what processes/risk is personal protective equipment issued?		
	Process/Risk / Type of PPE		
	Do you have a copy of the issue lists for PPE available on request?		
7	**EMERGENCY ARRANGEMENTS**	**YES**	**NO**
7.1	How do you manage your arrangements for dealing with emergencies?		
	Are these communicated to your sub-contractors?		
7.2	What provision have you made for first aid? E.g. Trained First Aiders		
7.3	What training do you provide to employees in Safety/Fire Fighting?		
	Please list institutions used for these training		
8	**RECRUITMENT OF PERSONNEL**	**YES**	**NO**
8.1	Are health and Safety factors considered when hiring personnel?		
8.2	Are medical examinations carried prior to employment?		
	In all cases		
	Where type of work requires medical examination		
8.3	Do you cover exit medical examination?		
8.4	How do you assess the competence of staff before an appointment is made?		
	E.g. Via trade testing, reference checks		
9.	**REPORTING AND INVESTIGATION OF ACCIDENTS, INCIDENTS AND DANGEROUS CONDITIONS**	**YES**	**NO**
9.1	Do you have a procedure for reporting, investigating and recording accidents and incidents?		
	Please supply a copy		
9.2	Is there a standard report/investigation form used?		

	Please supply a copy		
9.3	Do you have a formal system for reporting situations/near misses etc.?		
	Please provide a copy		
9.4	Please provide the following statistic for the last five years		

	YEAR1	YEAR 2	YEAR 3	YEAR 4	YEAR 5
Lost time accidents per 100 employees					
Major/ Reportable injuries per 100 employees					
Number of dangerous occurrences					
Lost man day due to accidents					

10	**HEALTH AND SAFETY COMMUNICATION AND CONSULTATION**	**YES**	**NO**
10.1	Are Health and Safety Committee meetings held between management and appointed Health and Safety representatives?		
10.2	Are the results of these meetings communicated to all employees?		
	If Yes please describe method		
10.3	Are Health and Safety meetings held?		
	At what frequency?		
	Chaired by whom?		
10.4	Do you carry out SHE promotions / campaigns?		
	If Yes please provide examples		

The following documentation should also be provided with the tender:

Letter of Good Standing from the Compensation Commissioner or licensed compensation insurer
COID Insurance

<u>Declaration</u>

I/we ……declare that the above information provided is correct.

Signed		**Date**	
Name		**Position**	
Tenderer			

Form C11: Schedule of Information to be provided by Tenderer

Company details:

Registered Address:
Contact Person:
Telephone:
Fax:

Shareholders

Names/Percentages of holdings:

Bankers

Name of Account Holder :
Bank:
Branch:
Account Number:
Bank and branch contact details:

Turnover

Approximate turnover for each of the past three years:
2016: ....
2017 .....
2018: ....

Management and Manpower Resources

Supervisors: .....
Labourers: .....
Other:

Name of Supervisor to be allocated to this contract:

Construction Equipment (Value in R)

Equipment owned by Company: .....
Own workshop/stores (location): .....

Signed		Date	
Name		Position	
Tenderer			

Form C12: Proposed Amendments and Qualifications

The Tenderer should record any deviations or qualifications he may wish to make to the tender documents in this Returnable Schedule. Alternatively, a tenderer may state such deviations and qualifications in a covering letter to his tender and reference such letter in this schedule.

The Tenderer's attention is drawn to clause C.3.8 of the Standard Conditions of Tender referenced in the Tender Data regarding the employer's handling of material deviations and qualifications.

Page	Clause or item	Proposal

Signed		Date	
Name		Position	
Tenderer			

Confidential

Form C13: CONFIDENTIALITY AND NON-DISCLOSURE AGREEMENT

between

AIRPORTS COMPANY SOUTH AFRICA SOC LIMITED
(Registration No. 1993/004149/30)
("Airports Company")

of
Riverwoods Office Park
24 Johnson Road
Bedforview
Johannesburg

AND

[NAME OF SERVICE PROVIDER]
(Registration No: _____)
("_____")

of

[Service Providers Address]

1. **INTERPRETATION**

In this agreement -

"confidential Information" – is information which is confidential to the disclosing party, and includes whether in written, graphic, oral, proprietary, tangible, intangible, electronic or other form, and,

any information in respect of know-how, formulae, statistics, processes, systems, business methods, marketing, trading and merchandising methods and information, promotional and advertising plans and strategies, pricing, financial plans and models, inventions, long-term plans, research and development data, user or consumer/ customer data and profiles, ideas, computer programmes, drawings and any other information of an confidential nature of the disclosing party, in whatever form it may be;

the contractual business and financial arrangements of the disclosing party and others with whom it has business arrangements of whatever nature;

all information peculiar to the business of the disclosing party which is not readily available to a competitor of the disclosing party in the ordinary course of business;

the fact of and content of any discussions between the disclosing party and the receiving party as well as the existence and content of any agreement, which may be concluded between the disclosing party and the receiving party;

all other matters of a confidential nature which relate to the disclosing party's business;

generally, information which is disclosed in circumstances of confidence or would be understood by the parties, exercising reasonable business judgement, to be confidential;

all information of whatsoever nature relating to the disclosing party as contemplated in 2.1 below;

but does not include information which -

is or hereafter becomes part of the public domain, otherwise than as a result of a breach or default of the receiving party or of a representative or affiliate of the receiving party;

can be shown to have been lawfully in the possession of the receiving party or its affiliates or consultants prior to its disclosure and is not subject to an existing agreement between the disclosing party and the receiving party;

is acquired by the receiving party independently from a third party who lawfully acquired such information without restriction and who had not previously obtained the confidential information directly or indirectly under a confidentiality obligation from the disclosing party;

is acquired or developed by the receiving party independently of the disclosing party and in circumstances which do not amount to a breach of the provisions of this agreement;

is disclosed or released by the receiving party to satisfy an order of a court of competent jurisdiction or to otherwise comply with the provisions of any law or regulation in force at the time or the requirements of any recognised stock exchange; provided that, in these circumstances, the receiving party shall inform the disclosing party of the requirement to disclose prior to making the disclosure and provided further that the receiving party will disclose only that portion of the confidential information which it is legally required to so disclose; and the receiving party will use its reasonable endeavours to protect the confidentiality of such information to the widest extent lawfully possible in the circumstances (and shall co-operate with the disclosing party if it elects to contest any such disclosure);

For the purposes of this agreement the party, which discloses confidential information, shall be referred to as “the disclosing party” and the party, which receives the confidential information, shall be referred to as “the receiving party”.

““affiliate” –of a Party means any person, now or hereafter existing, who directly or indirectly controls, *(holding company)* or is controlled or is under common control of such Party (subsidiary company); a Person “controls” another person if it holds or is beneficially entitled to hold , directly or indirectly, other than by way of security interest only, more than 50% of its voting , income or capital;

“disclosing party” – the party disclosing confidential information in terms of this agreement and being Airports Company;

“receiving party” – the party receiving confidential information in terms of this agreement;

“the parties” – the Airports Company and _____.

INTRODUCTION

The parties intend to provide each other with certain information pertaining to their operations and the parties are in the process of discussing certain matters with a view to concluding an agreement (“the potential agreement”), which discussions have required and will require the disclosure to one another of information of a proprietary, secret and confidential nature. Whether or not the parties conclude the potential agreement will not affect the validity of this agreement.

If the confidential information so disclosed is used by the receiving party for any purpose other than that for which its use is authorised in terms of this agreement or is disclosed or disseminated by the receiving party to another person or entity which is not a party to this agreement, this may cause the disclosing party to suffer damages and material financial loss.

This agreement shall also bind the parties, notwithstanding the date of signature hereof, in the event that either party shall have disclosed any confidential information to the other party prior to date of signature hereof.

The parties wish to record the terms and conditions upon which each shall disclose confidential information to the other, which terms and conditions shall constitute a binding and enforceable agreement between the parties and their agents.

3. **USE OF CONFIDENTIAL INFORMATION**

Any confidential information disclosed by the disclosing party shall be received and used by the receiving party only for the limited purpose described in 2.1 above and for no other purpose.

4. **NON-DISCLOSURE**

4.1 THE RECEIVING PARTY undertakes that -

it will treat the disclosing party's confidential information as private and confidential and safeguard it accordingly;

it will not use (except as permitted in 3 above) or disclose or release or copy or reproduce or publish or circulate or reverse or engineer and/or decompile or otherwise transfer, whether directly or indirectly, the confidential information of the disclosing party to any other person or entity; and the receiving party shall take all such steps as may be reasonably necessary to prevent the disclosing party's confidential information failing into the hands of unauthorised persons or entities;

it shall not disclose the confidential information of the disclosing party to any employee, consultant, professional adviser, contractor or sub-contractor or agent of the receiving party (collectively referred to herein as "representative") or an affiliate of the receiving party, nor shall they be given access thereto by the receiving party -
unless it is strictly necessary for the purposes referred to in 2.1 above; and

the receiving party shall have procured that the representative, affiliate or consultant to whom or to which such information is disclosed or made available shall have agreed to be bound by all the terms of this agreement,

and, in such event, the receiving party hereby indemnifies the disclosing party against any loss, harm or damage which it may suffer as a result of the unauthorised disclosure of confidential information by a representative, affiliate or consultant.

4.2 Any documentation or written record or other material containing confidential information (in whatsoever form) which comes into the possession of the receiving party shall itself be deemed to form part of the confidential information of the disclosing party. The receiving party shall, on request, and in any event if the discussions referred to in 2.1 above should not result in an agreement, return to the disclosing party all of its confidential information which is in physical form (including all copies) and shall destroy any other records (including, without limitation, those in machine readable form) as far as they contain the disclosing party's confidential information. The receiving party will, upon written or oral request from the disclosing party and within five (5) business days of the disclosing party's request, provide the disclosing party with written confirmation that all such records have been destroyed.

5. **COPIES**

5.1 The receiving party may only make such copies of the disclosing party's confidential information as are strictly necessary for the purpose and the disclosures which are not in breach of this agreement and authorised in terms of this agreement. The receiving party shall clearly mark all such copies as "Confidential".

5.2 At the written request of the disclosing party, the receiving party shall supply to the disclosing party a list showing, to the extent practical –

5.2.1 where copies of the confidential Information are held;
5.2.2 copies that have been made by the receiving party (except where they contain insignificant extracts from or references to confidential information) and where they are held; and

5.2.3 the names and addresses of the persons to whom confidential information has been disclosed and, if applicable, a copy of the confidentiality undertaking signed by such persons complying with the provisions of this agreement.

6. THE USE OF THE COMPANY'S INTELLECTUAL PROPERTY

The receiving party shall not use any intellectual property of the Company (including trademarks, service marks, logos, slogans, trade names, brand names and other indicia of origin) (collectively, the "**Company IP**") for any reason whatsoever without first obtaining the Company's prior written consent which consent the Company shall be entitled to grant solely at its own discretion.

If the receiving party requires the use of such Company IP, a request must be sent to the Brand Custodians Office, via email to **brandcustodian@airports.co.za.** Each single request by the same receiving party shall be treated as a new request.

Should the Company provide its consent in terms of clause 0 above, the receiving party shall comply with the Company's policies and standards with regard to the use of the Company IP. Such policies and standards shall be communicated to the receiving party at the time the Company grants the consent to the receiving party.

Failure to adhere to the provisions of this clause 6 or the policies, brand requirements and protocols that will be communicated by the Brand Custodians Office to the receiving party, shall result in the penalty equal to the value of 2% (two per cent) of the receiving party's annual turnover in the financial year in which the aforesaid failure occurred.

7. DURATION

Subject to Clause 2.3 this agreement shall commence or shall be deemed to have commenced on the date of signature of this agreement by the last party to sign the agreement.

This agreement shall remain in force for a period of **5** years ("the term"), or for a period of one (1) year from the date of the last disclosure of confidential information to the receiving party, whichever is the longer period, whether or not the parties continue to have any relationship for that period of time.

8. TITLE

All confidential information disclosed by the disclosing party to the receiving party is acknowledged by the receiving party:

to be proprietary to the disclosing party; and

not to confer any rights to the receiving party of whatever nature in the confidential information.

9. RELATIONSHIP BETWEEN THE PARTIES

The disclosing party is not obliged, by reason of this agreement, to disclose any of its confidential information to the receiving party or to enter into any further agreement or business relationship with the receiving party. Nothing herein shall imply or create any exclusive relationship between the Parties or otherwise restrict either Party from pursuing any business opportunities provided it complies at all times with the non-disclosure obligations set forth herein

The disclosing party retains the sole and exclusive ownership of intellectual property rights to its confidential information and no license or any other interest in such confidential information is granted in terms hereof or by reason of its disclosure.

The termination of the discussions referred to in 2.1 above shall not release the parties from the obligations set out in this agreement.

10. ENFORCEMENT, GOVERNING LAWS AND JURISDICTION

This agreement shall be governed by and interpreted according to the laws of the Republic of South Africa, without reference to the choice of laws' provisions of the Republic of South Africa. In the event of a conflict between or inconsistency in the laws applicable in the various provinces of the Republic of South Africa, the law as applied and interpreted in the Gauteng Province shall prevail.

The parties irrevocably submit to the exclusive jurisdiction of the High Court of South Africa, Witwatersrand Local Division, in respect of any action or proceeding arising from this agreement.

The parties agree that, in the event of a breach of this agreement, monetary damages would not be an adequate remedy. In the event of a breach or threatened breach of any provisions of this agreement by the receiving party, the disclosing party (and/or its relevant affiliate) shall be entitled to injunctive relief in any court of competent jurisdiction and the receiving party shall reimburse the disclosing party for any costs, claims, demands or liabilities arising directly or indirectly out of a breach. Nothing contained in this agreement shall be construed as prohibiting a party or its affiliate from pursuing any other remedies available to it for a breach or threatened breach.

The failure by the disclosing party to enforce or to require the performance at any time of any of the provisions of this agreement shall not be construed to be a waiver of such provision, and shall not affect either the validity of this agreement or any part hereof or the right of the disclosing party to enforce the provisions of this agreement.

11. DOMICILIUM

The parties choose as their *domicilium* the addresses indicated in the heading to this agreement for the purposes of giving any notice, the payment of any sum, the serving of any process and for any other purpose arising from this agreement.

Each of the parties shall be entitled from time to time, by written notice to the other, to vary its domicilium to any other address which is not a post office box or poste restante.

Any notice required or permitted to be given in terms of this agreement shall be valid and effective only if in writing.

Any notice given and any payment made by one party to the other ("the addressee") which:

is delivered by hand during the normal business hours of the addressee at the addressee's domicilium for the time being shall be presumed, until the contrary is proved, to have been received by the addressee at the time of delivery;

is posted by prepaid registered post from an address within the Republic of South Africa to the addressee at the addressee's domicilium for the time being shall be presumed, until the contrary is proved, to have been received by the addressee on the fourth day after the date of posting;

is transmitted by facsimile to the addressee's receiving machine shall be presumed, until the contrary is proved, to have been received within one (1) hour of transmission where it is transmitted during normal business hours or, if transmitted outside normal business hours, within one (1) hour of the resumption of normal business hours on the next normal business day.

12. GENERAL

No party shall be bound by any representation, warranty, undertaking, promise or the like not recorded in this agreement.

No addition to, variation or agreed cancellation of this agreement shall be of any force or effect unless in writing and signed by or on behalf of the parties.

Any indulgence which either party may show to the other in terms of or pursuant to the provisions contained in this agreement shall not constitute a waiver of any of the rights of the party which granted such indulgence.

The parties acknowledge that this agreement and the undertakings given by it in terms hereof are fair and reasonable in regard to their nature, extent and period and go no further than is reasonably necessary to protect the interests of the parties.

The parties hereby confirm that they have entered into this agreement with full and clear understanding of the nature, significance and effect thereof and freely and voluntarily and without duress.

Neither party shall have the right to assign or otherwise transfer any of its rights or obligations under this agreement.

This agreement may be executed in several counterparts that together shall constitute one and the same instrument.

In this agreement, clause headings are for convenience and shall not be used in its interpretation.

Each clause of this agreement is severable, the one from the other and if any one or more clauses are found to be invalid or unenforceable, that clause shall not affect the balance of the clauses which shall remain in full force and effect.

SIGNED at _____ on _____day of _____2018

_____

AIRPORTS COMPANY SOUTH AFRICA SOC LIMITED

the signatory warranting that he is duly authorised thereto.

Name: _____

Designation: _____

AS WITNESSES

_____

2. _____

SIGNED at _____ on _____day of _____2018

_____

[NAME OF SERVICE PROVIDER]

the signatory warranting that s/he is duly authorised thereto.

Name: _____

Designation: _____

AS WITNESSES

_____

_____

Tel +27 11 723 1400 Fax +27 11 453 9354
The Maples, Riverwoods, 24 Johnson Road,
Bedfordview, Gauteng, South Africa, 2008
P O Box 75480, Gardenview,
Gauteng, South Africa, 2047
www.airports.co.za

Airports Company South Africa SOC Ltd
Reg No 1993/004149/30 VAT No 4930138393

AIRPORTS COMPANY SOUTH AFRICA SOC LIMITED

PROJECT NUMBER: DIA6746/2021/RFP

TITLE OF PROJECT: CONTRACTOR APPOINTMENT FOR REPLACEMENT OF THE FIRE DETECTION SYSTEM AT KING SHAKA INTERNATIONAL AIRPORT

NEC 3: ENGINEERING AND CONSTRUCTION CONTRACT (ECC)

Between **AIRPORTS COMPANY SOUTH AFRICA SOC LIMITED**

Applicable at KING SHAKA INTERNATIONAL AIRPORT.

(Registration Number: 1993/004149/30)

and

(Registration Number:)

for **CONTRACTOR APPOINTMENT FOR REPLACEMENT OF THE FIRE DETECTION SYSTEM AT KING SHAKA INTERNATIONAL AIRPORT**

Contents:

Part C1: Agreements and Contract Data
C1.1: Form of Offer and Acceptance

Offer

The Employer, identified in the Acceptance signature block, has solicited offers to enter into a contract for the procurement of contractor services for supply, maintenance and commissioning of dry type transformers.

The tenderer, identified in the Offer signature block, has examined the documents listed in the Tender Data and addenda thereto as listed in the Returnable Schedules, and by submitting this Offer has accepted the Conditions of Tender.

By the representative of the tenderer, deemed to be duly authorised, signing this part of this Form of Offer and Acceptance the tenderer offers to perform all of the obligations and liabilities of the **Contractor** under the contract including compliance with all its terms and conditions according to their true intent and meaning for an amount to be determined in accordance with the conditions of contract identified in the Contract Data.

THE OFFERED TOTAL OF THE PRICES INCLUSIVE OF VAT IS:

(in words)

(in figures)

THE OFFERED PRICES ARE AS STATED IN THE PRICING SCHEDULE

This Offer may be accepted by the Employer by signing the Acceptance part of this Form of Offer and Acceptance and returning one copy of this document including the Schedule of Deviations (if any) to the tenderer before the end of the period of validity stated in the Tender Data, or other period as agreed, whereupon the tenderer becomes the party named as the **Contractor** in the conditions of contract identified in the Contract Data.

Signature(s)	.....	.....
Name(s)	.....	.....
Capacity	.....	.....
For the Bidder:	.....	
Name & signature of witness	*(Insert name and address of organisation)*	Date .....

Acceptance

By signing this part of this Form of Offer and Acceptance, the Employer identified below accepts the tenderer's Offer. In consideration thereof, the Employer shall pay the **Contractor** the amount due in accordance with the conditions of contract identified in the Contract Data. Acceptance of the tenderer's Offer shall form an agreement between the Employer and the tenderer upon the terms and conditions contained in this agreement and in the contract that is the subject of this agreement.

The terms of the contract, are contained in:

Part C1	Agreements and Contract Data, (which includes this Form of Offer and Acceptance)
Part C2	Pricing Data
Part C3	Scope of Work: Works Information
Part C4	Site Information

and drawings and documents (or parts thereof), which may be incorporated by reference into the above listed Parts.

Deviations from and amendments to the documents listed in the Tender Data and any addenda thereto listed in the Returnable Schedules as well as any changes to the terms of the Offer agreed by the tenderer and the Employer during this process of offer and acceptance, are contained in the Schedule of Deviations attached to and forming part of this Form of Offer and Acceptance. No amendments to or deviations from said documents are valid unless contained in this Schedule.

The tenderer shall within two weeks of receiving a completed copy of this agreement, including the Schedule of Deviations (if any), contact the Employer's agent (whose details are given in the Contract Data) to arrange the delivery of any securities, bonds, guarantees, proof of insurance and any other documentation to be provided in terms of the conditions of contract identified in the Contract Data. Failure to fulfil any of these obligations in accordance with those terms shall constitute a repudiation of this agreement.

Notwithstanding anything contained herein, this agreement comes into effect on the date when the tenderer receives one fully completed original copy of this document, including the Schedule of Deviations (if any). Unless the tenderer (now **Contractor)** within five working days of the date of such receipt notifies the Employer in writing of any reason why he cannot accept the contents of this agreement, this agreement shall constitute a binding contract between the Parties.

Signature(s)	.....	.....
Name(s)	.....	.....
Capacity	.....	.....
for the Employer		
	Airports Company South Africa, 1 Canelands Drive, MSO Administration Building La Mercy, 4407	
	.....	
	(Insert name and address of organisation)	
Name & signature of witness	.....	Date .....

Schedule of Deviations

1 Subject . . . . . .

Details . . . . . .

. . . . . .

. . . . . .

. . . . . .

2 Subject . . . . . .

Details . . . . . .

. . . . . .

. . . . . .

. . . . . .

3 Subject . . . . . .

Details . . . . . .

. . . . . .

. . . . . .

. . . . . .

By the duly authorised representatives signing this agreement, the Employer and the Tenderer agree to and accept the foregoing schedule of deviations as the only deviations from and amendments to the documents listed in the Tender Data and addenda thereto as listed in the returnable schedules, as well as any confirmation, clarification or changes to the terms of the offer agreed by the Tenderer and the Employer during this process of offer and acceptance.

	For the Employer	**For the Bidder**
Signature (s)	.....	.....
Name (s)	.....	.....
Capacity	.....	.....
Name and Address	**Airports Company South Africa SOC Limited** **1 Canelands Drive,** **Administration Office MSO Building** **King Shaka International Airport** **La Mercy, 4407**	
	.....	.....
Name & Signature of witness	*(Insert name and address of organisation)*	*(Insert name and address of organisation)*
	.....	.....
Date	.....	.....

Part C1.2a Contract Data

Part one – Data provided by the *Employer*

The Conditions of contract are selected from the NEC3 Engineering and Construction Contract, April 2013.

Each item of data given below is cross-referenced to the NEC3 Engineering Construction Contract which requires it.

Clause	Statement	Data
1	**General**	
	The *conditions of contract* are the core clauses and the clauses for Main Option	
	Main Option Dispute resolution Option	**B: Priced contract with Bill of Quantities** **W1: Dispute resolution procedure**
	Secondary Options (incorporating amendments)	**X2: Changes in the law** **X4: Parent company guarantee** **X7: Delay damages** **X13: Performance Bond** **X18: Limitation of liability** **Z: Additional conditions of contract** of the NEC3 Engineering and Construction Contract, April 2013
10.1	The *Employer* is (Name)	Airports Company South Africa SOC Limited, Applicable at King Shaka International Airport
	Address	Airports Company South Africa SOC Limited 1 Canelands Drive, Administration Office MSO Building King Shaka International Airport La Mercy, 4407
	Telephone Fax	032 436 6000 032 436 6672
10.1	The *Project Manager* is	Katlego Mabua

	Address	Airports Company South Africa 1 Canelands Drive Office 23, MB3 Maintenance Building La Mercy, 4407
	Telephone E-mail address	032 436 6051 Katlego.Mabua@airports.co.za
10.1	The *Supervisor* is	Mnelisi Cebekhulu
	Address	Airports Company South Africa 1 Canelands Drive MSO Administration Building La Mercy, 4407
	Telephone Fax Email	032 436 6281 032 436 6672 Mnelisi.Cebekhulu@airports.co.za
11.2	The *works* are	Replacement of the Fire Detection System at King Shaka International Airport.
11.2	The following matters will be included in the Risk Register	Availability of As Built information Access to Site Site Constraints and Constructability Covid-19 Protection and Transmission Mitigation Long lead time of fire detection items
11.2	The *Works Information* is in	Part C3 'Scope of Works' section of this contract
11.2	The *Site Information* is in	Part C4 'Site Information' section of this contract
11.2	The *boundary of the site* is	The boundary of King Shaka International Airport
12.2	The *law of the contract* is the law of	the Republic of South Africa
13.1	The *language of this contract* is	English
13.3	The *period of reply* is	Seven (7) days

3	**Time**	
31.2	The *starting date* is	TBC
11.2	The *completion date* is	TBC
30.1	The *access date* is	TBC
31.1	The *Contractor* submits a first (preliminary) programme with the tender by the tender closing date	Two (2) weeks after the *access date*
32.2	The *Contractor* submits revised programmes at intervals no longer than	Four (4) weeks
35.1	The *Employer* is not willing to take over the works before the *completion date*	The *Employer* and Others will have access to the *works* during construction or prior to completion. Such access by the Employer and Others shall not relieve the *Contractor* from liability for the completion of the *works* in accordance with the Works Information and in terms of this contract.
4	**Testing and Defects**	
42.2	The *defects date* is	Twelve (12) months after Completion of the whole of the *works*
43.2	The *defects correction period* is	Two (2) weeks
5	**Payment**	
50.1	The *assessment interval* is	Four (4) weeks, on the 14th working day of each successive month
50.1	The *currency of this contract* is the	South African Rand
51.2	The period within which payment is made is	Four (4) weeks
51.4	The *interest rate* is	The prime lending rate of the Nedbank Bank. as determined from time to time
6	**Compensation events**	
60.1	The *weather measurements* to be recorded for each calendar month are	the cumulative rainfall (mm) the number of days with rainfall more than 10 mm the number of days with minimum air temperature less than 0 degrees Celsius
60.1	The place where weather is to be recorded (on the Site) is	At the Construction Site Office and the records to be kept on site in a file clearly marked for this purpose

60.1	Assumed values for the ten-year return *weather data* for each *weather measurement* for each calendar month are	

Month	Days	Month	Days
January	1	July	4
February	1	August	3
March	2	September	2
April	2	October	2
May	3	November	2
June	3	December	1

7	**Title**	No data required for this section of the *conditions of contract*
8	**Risks and Insurance**	
84.1	The *Employer* provides these insurances	Refer to the Insurance Clauses which is attached at the end of the Contract Data
84.2	The *Contractor* provides the insurance stated in	The Insurance Clauses which is attached at the end of the Contract Data. The insurances are in the joint names of the Parties and provide cover for events which are at the Contractor's risk from the starting date until the Defects Certificate or a termination certificate has been issued.
	The minimum limit of indemnity for insurance in respect of death of or bodily injury to employees of the Contractor arising out of and in the course of their employment in connection with this contract for any one event is:	As prescribed by the Compensation for Occupational Injuries and Diseases Act No. 130 of 1993
9	**Termination**	No data required for this section of the *conditions of contract*
10	**Data for Main Options**	
B	Priced contract with Bill of Quantities	
11	**Data for Option W1**	
W1.1	The *Adjudicator* is	The person appointed jointly by the parties from the list of adjudicators contained below
W1.2	The *Adjudicator nominating body* is	The current Chairman of Johannesburg Advocate's Bar Council
W1.4	The *tribunal* is	Arbitration
W1.4	If the *tribunal* is arbitration, the arbitration procedure is	The *arbitration procedure* is set out in The Rules for the Conduct of Arbitrations 2013 Edition, 7th Edition, published by The Association of Arbitrators, (Southern Africa)

W1.4	The place where arbitration is to be held is	Johannesburg, South Africa.
W1.4	The person or organisation who will choose an arbitrator	The *Arbitrator* is the person selected by the Parties as and when a dispute arises in terms of the relevant Z Clause, from the Panel of Arbitrators provided under the relevant Z clause if the arbitration procedure does not state who selects an arbitrator. The Arbitrator nominating body is the Chairman of the Johannesburg Advocates Bar Council.
12	**Data for Secondary Option Clauses**	
X7	**Delay Damages**	
X7.1	Delay damages for late completion of the sections of the *works* are:	

Phase	**Description**	**Amount per day**
1	Start-up	0.4167% of contract value per day
2	Full completion and handover of Fuel Farm	0.4167% of contract value per day
3	Full completion and handover of Fuel Forward Depot	0.4167% of contract value per day
4	Full completion and handover of Airfield Substation 1	0.4167% of contract value per day
5	Full completion and handover of Airfield Substation 2	0.4167% of contract value per day
6	Full completion and handover of Airfield Substation 3	0.4167% of contract value per day
7	Full completion and handover of Airfield Substation 3	0.4167% of contract value per day
8	Full completion and handover of AG1, AG2, AG3	0.4167% of contract value per day
9	Full completion and handover of Crash Fire Rescue	0.4167% of contract value per day
10	Full completion and handover of ATNS/SAWS Control Tower	0.4167% of contract value per day
11	Full completion and handover of Cooling Tower	0.4167% of contract value per day

12	Full completion and handover of Multi-storey Parking and Offices	0.4167% of contract value per day
13	Full completion and handover of Terminal Building Basement	0.4167% of contract value per day
14	Full completion and handover of Terminal Building Arrivals	0.4167% of contract value per day
15	Full completion and handover of Terminal Building Departures	0.4167% of contract value per day
16	Full completion and handover of Arrivals Ceiling Void	0.4167% of contract value per day
17	Full completion and handover of Terminal Building Arrivals Mezz Corridor	0.4167% of contract value per day
18	Full completion and handover of Terminal Building Departures Corridor	0.4167% of contract value per day
19	Full completion and handover of Terminal Building Arrivals Corridor	0.4167% of contract value per day
20	Full completion and handover of Maintenance Buildings (MB1, MB2 and MB3)	0.4167% of contract value per day
21	Full completion and handover of T1 Substation	0.4167% of contract value per day
22	Full completion and handover of Airline Offices TOC and Plant Room	0.4167% of contract value per day
23	Full completion and handover of SCADA system	0.4167% of contract value per day
24	Submission of operating manual, CoC, QCP documentation, OEM documents and testing results as per stipulated in part C3 of this contract after project completion	0.4167% of contract value per day

	Delay damages of the *works* are	Amount per day is 0.4167%, to the maximum of 10% of the Contract value
X13	**Performance bond**	
X13.1	The amount of the performance bond is	10% of the contract value. Pro-forma draft of a performance bond to be used is attached to this contract.

X16	**Retention**	
X16.1	The *retention percentage* is	0% of the Contract value.
X18	**Limitation of Liability**	
X18.1	The *Contractor*'s liability to the *Employer* for indirect or consequential loss is limited to	Nil - Neither Party is liable to the other for any consequential or indirect loss, including but not limited to loss of profit, loss of income or loss of revenue
X18.2	For any one event, the *Contractor*'s liability to the *Employer* for loss of or damage to the *Employer*'s property is limited to	The total of the Prices
X18.3	The *Contractor's* total liability to the Employer for defects due to his design which are not listed on the Defects Certificate is limited to	The total of the Prices
X18.4	The *Contractor*'s total liability to the *Employer* for all matters arising under or in connection with this contract, other than excluded matters, is limited to	The Contractor's total direct liability to the Employer for all matters arising under or in connection with this contract, other than the excluded matters, is limited to the total of the Prices and applies in contract, tort or delict and otherwise to the extent allowed under the law of the contract. The e excluded matters are amounts payable by the Contractor as stated in this contract for Loss of or damage to the Employer's property, Delay damages, Defects liability, Insurance liability to the extent of the Contractor's risks loss of or damage to property (other than the *works*, Plant and Materials), death of or injury to a person; damage to third party property; and infringement of an intellectual property right
Z	**The *Additional conditions of contract* are**	**Z1 – Z20**
	Amendments to the Core Clauses	
Z1	**Interpretation of the law**	

Z1.1	**Add to core clause 12.3:** Any extension, concession, waiver or relaxation of any action stated in this contract by the Parties, the *Project Manager*, the *Supervisor*, or the *Adjudicator* does not constitute a waiver of rights, and does not give rise to an estoppel unless the Parties agree otherwise and confirm such agreement in writing.
Z2	**Providing the Works:**
Z2.1	**Delete core clause 20.1 and replace with the following:** The *Contractor* provides the works in accordance with the Works Information and warrants that the results of the Works, when complete, shall be fit for their intended purpose
Z3	**Other responsibilities:**
Z3.1	**Add the following at the end of core clause 27:** The *Contractor* shall have satisfied himself, prior to the Contract Date, as to the completeness, sufficiency and accuracy of all information and drawings provided to him as at the Contract Date
Z3.2	The *Contractor* shall be responsible for the correct setting out of the *Works* in accordance with the original points, lines and levels stated in the *Works* Information or notified by the *Project Manager*, *Supervisor* or the *Employer*. Any errors in the positioning of the *Works* shall be rectified by the *Contractor* at the *Contractor's* own costs.
Z4	**Extending the defects date:**
Z4.1	**Add the following as a new core clause 46:** If the *Employer* cannot use the *works* due to a Defect, which arises after Completion and before the *defects date*, the *defects date* is delayed by a period equal to that during which the *Employer*, due to a Defect, is unable to use the *works*
Z4.2	If part of the *works* is replaced due to a Defect arising after Completion and before the *defects date*, the *defects date* for the part of the *works* which is replaced is delayed by a period equal to that between Completion and the date by when the part has been replaced
Z4.3	The *Project Manager* notifies the *Contractor* of the change to a *defect date* when the delay occurs. The period between Completion and an extended *defects date* does not exceed twice the period between Completion and the *defects date* stated in the Contract Data
Z5	**Termination**
Z5.1	**Add the following to core clause 91.1, at the second main bullet, fifth sub-bullet point, after the words "assets or":** "business rescue proceedings are initiated or steps are taken to initiate business recue proceedings"**.**
	Amendment to the Secondary Option Clauses
Z6	**Performance Bond**
Z6.1	**Amend the first sentence of clause X13.1 to read as follows:** The *Contractor* gives the *Employer* an unconditional, on-demand performance bond, provided by a bank which the *Project Manager* and the *Employer* have accepted, for the amount stated in the Contract Data and in the form set out in Annexure C.ii of this Contract Data.

Z6.2	**Add the following new clause as Option X13.2:** The *Contractor ensures* that the performance bond is valid and enforceable until the end of the *contract period.* If the terms of the performance bond specify its expiry date and the end of the *contract period* does not coincide with such expiry date, four weeks prior to the said expiry date, the *Contractor* extends the validity of the performance bond until the end of the *contract period.* If the *Contractor* fails to so extend the validity of the performance bond, the *Employer* may claim the full amount of the performance bond and retain the proceeds as cash security
Z7	**Limitation of liability:**
	Insert the following new clause as Option X18.6:
Z7.1	The *Employer's* liability to the *Contractor* for the *Contractor's* indirect or consequential loss is limited to R0.00
Z7.2	Notwithstanding any other clause in this contract, any proceeds received from any insurances or any proceeds which would have been received from any insurances but for the conduct of the *Contractor* shall be excluded from the calculation of the limitations of liability listed in the contract
	Additional Z Clauses
Z8	**Cession, delegation and assignment**
Z8.1	The *Contractor* shall not cede, delegate or assign any of its rights or obligations to any person without the written consent of the *Employer*, which consent shall not be unreasonably withheld. This clause shall be binding on the liquidator/business rescue practitioner /trustee (whether provisional or not) of the *Contractor*
Z8.2	The *Employer* may cede and delegate its rights and obligations under this contract to any person or entity
Z9	**Joint and several liability**
Z9.1	If the *Contractor* constitutes a joint venture, consortium or other unincorporated grouping of two or more persons, these persons are deemed to be jointly and severally liable to the *Employer* for the performance of the Contract.
Z9.2	The *Contractor* shall, within 1 week of the Contract Date, notify the *Project Manager* and the *Employer* of the key person who has the authority to bind the *Contractor* on their behalf.
Z9.3	The *Contractor* does not materially alter the composition of the joint venture, consortium or other unincorporated grouping of two or more persons without prior written consent of the *Employer*.
Z10	**Ethics**
Z10.1	The *Contractor* undertakes:
Z10.1.1	not to give any offer, payment, consideration, or benefit of any kind, which constitutes or could be construed as an illegal or corrupt practice, either directly or indirectly, as an inducement or reward for the award or in execution of this contract;

Z10.1.2 to comply with all laws, regulations or policies relating to the prevention and combating of bribery, corruption and money laundering to which it or the *Employer* is subject, including but not limited to the Prevention and Combating of Corrupt Activities Act, 12 of 2004.

Z10.2 The *Contractor*'s breach of this clause constitutes grounds for terminating the *Contractor*'s obligation to Provide the Works or taking any other action as appropriate against the *Contractor* (including civil or criminal action). However, lawful inducements and rewards shall not constitute grounds for termination.

Z10.3 If the *Contractor* is found guilty by a competent court, administrative or regulatory body of participating in illegal or corrupt practices, including but not limited to the making of offers (directly or indirectly), payments, gifts, gratuity, commission or benefits of any kind, which are in any way whatsoever in connection with the contract with the *Employer*, the *Employer* shall be entitled to terminate the contract in accordance with the procedures stated in core clause 92.2. the amount due on termination is A1.

Z11 Confidentiality

Z11.1 All information obtained in terms of this contract or arising from the implementation of this contract shall be treated as confidential by the *Contractor* and shall not be used or divulged or published to any person not being a party to this contract, without the prior written consent of the *Project Manager* or the *Employer*, which consent shall not be unreasonably withheld.

Z11.2 If the *Contractor* is uncertain about whether any such information is confidential, it is to be regarded as such until otherwise notified by the *Project Manager*.

Z11.3 This undertaking shall not apply to –

Z11.3.1 Information disclosed to the employees of the *Contractor* for the purposes of the implementation of this agreement. The *Contractor* undertakes to procure that its employees are aware of the confidential nature of the information so disclosed and that they comply with the provisions of this clause;

Z11.3.2 Information which the *Contractor* is required by law to disclose, provided that the *Contractor* notifies the *Employer* prior to disclosure so as to enable the *Employer* to take the appropriate action to protect such information. The *Contractor* may disclose such information only to the extent required by law and shall use reasonable efforts to obtain assurances that confidential treatment will be afforded to the information so disclosed;

Z11.3.3 Information which at the time of disclosure or thereafter, without default on the part of the *Contractor*, enters the public domain or to information which was already in the possession of the *Contractor* at the time of disclosure (evidenced by written records in existence at that time);

Z11.4 The taking of images (whether photographs, video footage or otherwise) of the *works* or any portion thereof, in the course of Providing the Works and after Completion, requires the prior written consent of the *Project Manager*. All rights in and to all such images vests exclusively in the *Employer*

Z11.5 The *Contractor* ensures that all his Subcontractors abide by the undertakings in this clause.

Z12 *Employer*'s Step-in rights

Z12.1	If the *Contractor* defaults by failing to comply with his obligations and fails to remedy such default within 2 weeks of the notification of the default by the *Project Manager*, the *Employer*, without prejudice to his other rights, powers and remedies under the contract, may remedy the default either himself or procure a third party (including any subcontractor or supplier of the *Contractor*) to do so on his behalf. The reasonable costs of such remedial works shall be borne by the *Contractor*
Z12.2	The *Contractor* co-operates with the *Employer* and facilitates and permits the use of all required information, materials and other matter (including but not limited to documents and all other drawings, CAD materials, data, software, models, plans, designs, programs, diagrams, evaluations, materials, specifications, schedules, reports, calculations, manuals or other documents or recorded information (electronic or otherwise) which have been or are at any time prepared by or on behalf of the *Contractor* under the contract or otherwise for and/or in connection with the *works*) and generally does all things required by the *Project Manager* to achieve this end.
Z13	**Liens and Encumbrances**
Z13.1	The *Contractor* keeps the Equipment used to Provide the Services free of all liens and other encumbrances at all times. The *Contractor,* vis-a-vis the *Employer,* waives all and any liens which he may from time to time have, or become entitled to over such Equipment and any part thereof and procures that his Subcontractors similarly, vis-a-vis the *Employer,* waive all liens they may have or become entitled to over such Equipment from time to time
Z14	**Intellectual Property**
Z14.1	Intellectual Property ("IP") rights means all rights in and to any patent, design, copyright, trade mark, trade name, trade secret or other intellectual or industrial property right relating to the Works.
Z14.2	IP rights remain vested in the originator and shall not be used for any reason whatsoever other than carrying out the *works.*
Z14.3	The *Contractor* gives the *Employer* an irrevocable, transferrable, non-exclusive, royalty free licence to use and copy all IP related to the *works* for the purposes of constructing, repairing, demolishing, operating and maintaining the works
Z14.4	The written approval of the *Contractor* is to be obtained before the *Contractor*'s IP made available to any third party which approval will not be unreasonably withheld or delayed. Prior to making any *Contractor*'s IP available to any third party the *Employer* shall obtain a written confidentiality undertaking from any such third party on terms no less onerous than the terms the *Employer* would use to protect its IP
Z14.5	The *Contractor* shall indemnify and hold the *Employer* harmless against and from any claim alleging an infringement of IP rights (**"the claim"**), which arises out of or in relation to:
Z14.5.1	the *Contractor's* design, manufacture, construction or execution of the Works
Z14.5.2	the use of the *Contractor's* Equipment, or
Z14.5.3	the proper use of the Works.
Z14.6	The *Employer* shall, at the request and cost of the *Contractor*, assist in contesting the claim and the *Contractor* may (at its cost) conduct negotiations for the settlement of the claim, and any litigation or arbitration which may arise from it.

Z16 Dispute resolution:

Z16.1 Appointment of the Adjudicator

An *Adjudicator* is appointed when a dispute arises, from the Panel of Adjudicators below. The referring party nominates an Adjudicator, which nomination is either accepted or rejected by the other party. In the instance of a rejection of the nominated *Adjudicator,* the referring Party refers the appointment deadlock to the Chairman of the Johannesburg Bar Council, who appoints an *Adjudicator* listed in the Panel of Adjudicators below

The Parties appoint the *Adjudicator* under the NEC3 Adjudicator's Contract, April 2013

Panel of Adjudicators

Name	Location	Contact details (phone & e mail)
Adv. Ghandi Badela	Gauteng	+27 11 282 3700 ghandi@badela.co.za
Mr. Errol Tate Pr. Eng.	Durban	+27 11 262 4001 Errol.tate@mweb.co.za
Adv. Saleem Ebrahim	Gauteng	+27 11 535-1800 salimebrahim@mweb.co.za
Mr. Sebe Msutwana Pr. Eng.	Gauteng	+27 11 442 8555 sebe@civilprojects.co.za
Mr. Sam Amod	Gauteng	sam@samamod.com
Adv. Sias Ryneke SC	Gauteng	083 653 2281 reyneke@duma.nokwe.co.za
Mr. Emeka Ogbugo (Quantity Surveyor)	Pretoria	+27 12 349 2027 emeka@gosiame.co.za

Z16.2 Appointment of the Arbitrator

An *Arbitrator* is appointed when a dispute arises from the Panel of Arbitrators below. The referring party nominates an Arbitrator, which nomination is either accepted or rejected by the other party. In the instance of a rejection of the nominated *Arbitrator,* the referring Party refers the appointment deadlock to the Chairman of the Johannesburg Bar Council, who appoints an *Arbitrator* listed in the Panel of *Arbitrators* below

Panel of Arbitrators

Name	Location	Contact details (phone & e mail)
Adv. Ghandi Badela	Gauteng	+27 11 282 3700 ghandi@badela.co.za
Mr. Errol Tate Pr. Eng.	Durban	+27 11 262 4001 Errol.tate@mweb.co.za
Adv. Saleem Ebrahim	Gauteng	+27 11 535-1800 salimebrahim@mweb.co.za
Mr. Sebe Msutwana Pr. Eng.	Gauteng	+27 11 442 8555 sebe@civilprojects.co.za
Mr. Sam Amod	Gauteng	sam@samamod.com
Adv. Sias Ryneke SC	Gauteng	083 653 2281 reyneke@duma.nokwe.co.za
Mr. Emeka Ogbugo (Quantity Surveyor)	Pretoria	+27 12 349 2027 emeka@gosiame.co.za

Z17	**Notification of a compensation event**
Z17.1	Delete “eight weeks” in clause 61.3 and replace with “four weeks”. Delete the words “unless the event arises from the Project Manager or the Supervisor giving an instruction, issuing a certificate, changing an earlier decision or correcting an assumption.
Z18	**BBBEE Certificate**
Z18.1	The *Contractor* shall be expected to annually present a compliant BEE Certificate. Failure to do adhere to these requirements shall be considered a material breach of the conditions of this Contract, the sanction for which may be a cancellation of this Contract.
Z19	**Communication**
Z19.1	**Add a new Core Clause** 14.5 and 14.6 to read as follows: The *Project Manager* requires the written consent of the Employer if an action will result in a change to the design, scope, and Works information that is 5% or more
Z19.2	The *Project Manager* requires the written consent of the Employer if an action will result in the Completion Date being extended by more than 30 days.
Z20	**Delegation**
	As stipulated by Section 37(2) of the Occupational Health and Safety Act No. 85 of 1993 as amended the *Contractor* agrees to the following:
Z20.1	As part of this contract the *Contractor* acknowledge that it (mandatory) is an employer in its own right with duties as prescribed in the Occupational Health and Safety Act No 85 of 1993 as amended and agree to ensure that all work being performed, or Equipment, Plant and Materials being used, are in accordance with the provisions of the said Act, and in particular with regard to the Construction Regulations

PART C1.2b CONTRACT DATA

PART TWO – DATA PROVIDED BY THE *CONTRACTOR*

Clause	Statement	Data
10.1	The Contractor is (Name): Address: Telephone No. Fax No.	
11.2	The *working areas* are	Only the Site Area. See C4 'Site Information'
24.1	The *Contractor's Key people* are:	CV's to be appended to Tender Schedule
	Name: Job: Responsibility: Qualifications: Experience:	
	Name: Job: Responsibility: Qualifications: Experience:	
	Name: Job: Responsibility: Qualifications: Experience:	

Name:

Job:

Responsibility:

Qualifications:

Experience:

11.2	The *completion date* is	TBC
11.2	The following matters will be included in the Risk Register	Existing Services Access to Site Delay in supply of material and/or equipment Progress of the works against the program Travelling public and ACSA stakeholders Contractor to add other relevant risks.
11.2	The *Works Information* is in	Part C3 'Scope of Works' section of this contract
31.1	The programme identified in the	To be attached by Contractor

Part C1: Agreements and Contract Data

C1.3: Form of Guarantee

PRO FORMA FOR PERFORMANCE BOND

PERFORMANCE BOND

[TO BE REPLICATED ON BANK'S LETTERHEAD]

Brief description of contract…….

Name and address of Beneficiary.....

…….. (whom the contract defines as the Contractor).

We, the undersigned ..... and..... in our capacities as Guarantor's.....…….. of …….. **(Registration Number: ….)** (hereinafter called "the Bank") have been informed that …… hereinafter called the 'Principal') is your Contractor under such contract, which requires him to obtain an irrevocable, unconditional performance security.

At the request of the Principal, we ……..(name of bank) hereby irrevocably undertake to pay you, the Employer, any sum or sums not exceeding in total the amount of ……(the "Guaranteed Amount") upon receipt by us of your first written demand stating that such an amount (or lesser amount) as may be claimed is due and payable to the Employer.

This guarantee constitute an irrevocable, unconditional, non-negotiable and non-transferable undertaking to pay in accordance with the above, subject to the proviso that this Letter will not be interpreted as extending the Bank's liability to anything more than the Guaranteed Amount.

Notwithstanding anything to the contrary herein contained, the Bank's obligation shall be construed as principal and not as accessory to the contract and shall not be delayed or discharged by the fact that a dispute exists between the Employer and the Contractor.

We undertake to pay you such Guaranteed Amount upon receipt by us, within such period of 14 days, of your first written demand stating that such an amount (or lesser amount) as may be claimed is due and payable to the Employer.

The guarantee shall be governed by and construed in accordance with the laws of the Republic of South Africa

Signed at _____ on _____20….

For:

Registration Number:

_____

Name & Position

As witnesses:

1. _____

2. _____

PART C1: AGREEMENTS AND CONTRACT DATA

C1.4: OCCUPATIONAL HEALTH AND SAFETY AGREEMENT

OCCUPATIONAL HEALTH AND SAFETY AGREEMENT

AGREEMENT IN TERMS OF SECTION 37(2) OF THE OCCUPATIONAL HEALTH & SAFETY ACT (ACT 85 Of 1993) & CONSTRUCTION REGULATION 5.1(k)

OBJECTIVES

To assist Airport Company South Africa (ACSA) in order to comply with the requirements of:
The Occupational Health & Safety (Act 85 of 1993) and its regulations and
The Compensation for Occupational Injuries & Diseases Act (Act 130 of 1993) also known as the (COID Act).

To this end an Agreement must be concluded before any contractor/ subcontracted work may commence

The parties to this Agreement are:

Name of Organisation: **AIRPORTS COMPANY SOUTH AFRICA** **KING SHAKA INTERNATIONAL AIRPORT**
Physical Address: **Airport Company South Africa** 1 Canelands Drive, Administration Office MSO Building King Shaka International Airport La Mercy 4407

Hereinafter referred to as "Client"

Name of organisation:
Physical Address

Hereinafter referred to as "the Mandatary/ Principal Contractor"

MANDATORY'S MAIN SCOPE OF WORK

_____

_____

GENERAL INFORMATION FORMING PART OF THIS AGREEMENT

The Occupational Health & Safety Act comprises of SECTION 1-50 and all unrepealed REGULATIONS promulgated in terms of the former Machinery and Occupational Safety Act No.6 of 1983 as amended as well as other REGULATIONS which may be promulgated in terms of the Act and other relevant Acts pertaining to the job in hand.
"Mandatary" is defined as including as agent, a principal contractor or a contractor for work, but WITHOUT DEROGATING FROM HIS/HER STATUS IN HIS/HER RIGHT AS AN EMPLOYER or user of the plant
Section 37 of the Occupational Health & Safety Act potentially punishes Employers (PRINCIPAL CONTRACTOR) for unlawful acts or omissions of Mandataries (CONTRACTORS) save where a Written Agreement between the parties has been concluded containing arrangements and procedures to ensure compliance with the said Act BY THE MANDATARY.
All documents attached or refer to in the above Agreement form an integral part of the Agreement.
To perform in terms of this agreement Mandataries must be familiar and conversant with the relevant provisions of the Occupational Health & Safety Act 85 of 1993 (OHS Act) and applicable Regulations.
Mandatories who utilise the services of their own Mandatories (contractors) must conclude a similar Written Agreement with them.
Be advised that this Agreement places the onus on the Mandatary to contact the CLIENT in the event of inability to perform as per this Agreement.
This Agreement shall be binding for all work the Mandatary undertakes for the client.
All documentation according to the Safety checklist including a copy of the written Construction Manager appointment in terms of construction regulation 8, must be submitted 7 days before work commences.

THE UNDERTAKING

The Mandatary undertakes to comply with:

INSURANCE

The Mandatary warrants that all their employees and/or their contractor's employees if any are covered in terms of the COID Act, which shall remain in force whilst any such employees are present on the Client's premises. A letter is required prior commencing any work on site confirming that the Principal contractor or contractor is in good standing with the Compensation Fund or Licensed Insurer.
The Mandatary warrants that they are in possession of the following insurance cover, which cover shall remain in force whilst they and /or their employees are present on the Client's premises, or which shall remain in force for that duration of their contractual relationship with the Client, whichever period is the longest.
Public Liability Insurance Cover as required by the Subcontract Agreement.
Any other Insurance cover that will adequately makes provision for any possible losses and/or claims arising from their and /or their Subcontractors and/or their respective employee's acts and/or omissions on the Client's premises.

COMPLIANCE WITH THE OCCUPATIONAL HEALTH & SAFETYACT 85 OF 1993

The Mandatary undertakes to ensure that they and/or their subcontractors if any and/or their respective employees will at all times comply with the following conditions:

All work performed by the Mandatary on the Client's premises must be performed under the close supervision of the Mandatary's employees who are to be trained to understand the hazards associated with any work that the Mandatary performs on the Client's premises.
The Mandatary shall be assigned the responsibility in terms of Section 16(1) of the OHSAct 85 of 1993, if the Mandatary assigns any duty in terms of Section 16(2), a copy of such written assignment shall immediately be forwarded to the Client.
The Mandatary shall ensure that he/she familiarise himself/herself with the requirements of the OHSAct 85 of 1993 and that s/he and his/her employees and any of his subcontractors comply with the requirements.
The Mandatary shall ensure that a baseline risk assessment is performed by a competent person before commencement of any work in the Client's premises. A baseline risk assessment document will include identification of hazards and risk, analysis and evaluation of the risks and hazards identified, a documented

plan and safe work procedures to mitigate, reduce or control the risks identified, and a monitoring and review plan of the risks and hazards.
The Mandatary shall appoint competent persons who shall be trained on any Occupational Health & Safety aspect pertaining to them or to the work that is to be performed.
The Mandatary shall ensure that discipline regarding Occupational Health & Safety shall be strictly enforced.
Any personal protective equipment required shall be issued by the Mandatary to his/her employees and shall be worn at all times.
Written safe working practices/procedures and precautionary measures shall be made available and enforced and all employees shall be made conversant with the contents of these practises.
No unsafe equipment/machinery and/or articles shall be used by the Mandatary or contractor on the Client's premises.
All incidents/accidents referred to in OHS Act shall be reported by the Mandatary to the Provincial Director: Department of Labour as well as to the Client.
No user shall be made by the Mandatary and/or their employees and or their subcontractors of any of the Client's machinery/article/substance/plant/personal protective equipment without prior written approval.
The Mandatary shall ensure that work for which the issuing of permit is required shall not be performed prior to the obtaining of a duty completed approved permit.
The Mandatary shall ensure that no alcohol or any other intoxicating substance shall be allowed on the Client's premises. Anyone suspected to be under the influence of alcohol or any other intoxicating substance shall not be allowed on the premises. Anyone found on the premises suspected to be under the influence of alcohol or any other intoxicating substance shall be escorted off the said premises immediately.
Full participation by the Mandatary shall be given to the employees of the Client if and when they inquire into Occupational Health & Safety.

FURTHER UNDERTAKING

Only a duly authorised representative appointed in terms of Section 16.2 of the OHS Act is eligible to sign this agreement on behalf of the Mandatary. The signing power of this representative must be designated in writing by the Chief Executive Officer of the Mandatary. A copy of this letter must be made available to the Client.
The Mandatary confirms that he has been informed that he must report to the Client's management, in writing anything he/she deems to be unhealthy and /or unsafe. He has versed his employees in this regard.
The Mandatary warrants that he/she shall not endanger the health & safety of the Client's employees and other persons in any way whilst performing work on the Client's premises.
The Mandatary understands that no work may commence on the Client's premises until this procedure is duly completed, signed and received by the Client.
Non-compliance with any of the above clauses may lead to an immediate cancellation of the contract.

ACCEPTANCE BY MANDATARY

In terms of section 37(2) of the Occupational Health & Safety Act 85 of 1993 and section 5.1(k) of the Construction Regulations 2014,

I ……. a duly authorised 16.2 Appointee acting for and on behalf of ……. (company name) undertake to ensure that the requirements and the provision of the OHS Act 85 of 1993 and its regulations are complied with.

Mandatary – WCA/ Federated Employers Mutual No…….

Expiry date …….

_____ _____
SIGNATURE ON BEHALF OF MANDATARY **DATE**
(Warrant his authority to sign)

_____ _____
SIGNATURE ON BEHALF OF THE CLIENT **DATE**
AIRPORT COMPANY SOUTH AFRICA

PART C1: AGREEMENTS AND CONTRACT DATA

C1.5: ACSA INSURANCE CLAUSES

INSURANCE CLAUSES FOR CAPEX PROJECTS

[DRAFTING NOTE: ENSURE THAT CORRECTLY DATED INSURANCE SCHEDULE ATTACHED – NOKULUNGA MASIZA IS THE CUSTODIAN]

The insurance clauses in this document should be extracted and attached to tender documents and to contracts.

SECTION A: DEFINITIONS

Landside refers to:

Areas of the airport before the security points, and
The restricted area beyond the security points but, within the perimeter of gatehouses, passenger terminals and cargo buildings

Airside refers to:

The Apron / manoeuvring areas
Area within the airside boundary/perimeter fence, excluding the internal areas of the passenger terminals, perimeter gatehouses and cargo building.

SECTION B: INSURANCE CLAUSES

1. Insurance requirements for contracts with a value below R50million on the LANDSIDE

1.1 Contract Works

With regards to contract works claims, the contractor/consultant is responsible for a deductible (excess) of R250 000.
Contractors / consultants may re-insure the deductible

1.2 Public Liability

In the event of a claim against the contractor / consultant for 3rd party property damage the contractor / consultant will be responsible for a deductible (excess) of R275 000
In the event of a claim against the contractor / consultant for removal of lateral support, the contractor / consultant will be responsible for a deductible (excess) of R500 000
Contractors / consultants may re-insure the deductibles

1.3 Professional Indemnity

All consultants are responsible for Professional Indemnity cover of R5million
Contractors who have a material design element, excluding typical P & G related work, as part of their scope, are responsible for Professional Indemnity cover of R5million
In the event of a claim above R5million, the ACSA PI cover will kick in for the amount in excess of R5m.

Proof of cover in the form of a certificate of insurance should be provided to ACSA before a contract is signed between ACSA and the contractor and/or consultant.

2. Insurance requirements for contracts below R50million on the AIRSIDE

2.1 Contract Works

With regards to contract works claims, the contractor / consultant is responsible for a deductible (excess) of R250 000.
Contractors / consultants may re-insure the deductible

2.2 Public Liability

In the event of a claim brought against the contractor / consultant for 3rd party property damage the contractor / consultant will be responsible for a deductible (excess) of R525 000
In the event of a claim brought against the contractor / consultant for removal of lateral support, the contractor / consultant will be responsible for a deductible (excess) of R750 000
In the event of a claim brought against the contractor / consultant for damage to aircraft, the contractor / consultant will be responsible for a deductible (excess) of R750 000
Contractors / consultants may re-insure the deductibles

2.3 Professional Indemnity

All consultants are responsible for Professional Indemnity cover of R5million
Contractors who have a material design element, excluding typical P & G related work, as part of their scope, are responsible for a Professional Indemnity cover of R5million.
In the event of a claim above R5million, the ACSA PI cover will kick in for the amount in excess of R5million.
Proof of cover in the form of a certificate of insurance should be provided to ACSA before a contract is signed between ACSA and the contractor and/or consultant.

3. Insurance requirements for contracts with a value above R50 million on the LANDSIDE

Contracts with a value of more R50 million are not automatically covered under the construction policies. A separate quote is provided by insurers per contract.

3.1 Contract Works

With regards to contract works claims, the contractor / consultant is responsible for the following deductibles:

All Civil Work and Earthworks – R300 000 deductible (excess)
All other claims – R300 000 deductible (excess)
Other property insured – R700 000 deductible (excess)
Contractors / consultants may re-insure the deductibles

3.2 Public Liability

In the event of a claim brought against the contractor / consultant for 3rd party property damage the contractor / consultant will be responsible for a deductible (excess) of R275 000
In the event of a claim brought against the contractor / consultant for removal of lateral support, the contractor / consultant will be responsible for a deductible (excess) of R500 000
Contractors / consultants may re-insure the deductibles

3.3 Professional Indemnity

All consultants are responsible for Professional Indemnity cover of R10million
Contractors who have a material design element, excluding typical P & G related work, as part of their scope, are responsible for a Professional Indemnity cover of R10million
In the event of a claim above R10million, the ACSA PI cover will kick in for the amount in excess of R10m
Proof of cover in the form of a certificate of insurance should be provided to ACSA before a contract is signed between ACSA and the contractor and/or consultant.

4. Insurance requirements for contracts with a value above R50 million on the AIRSIDE

Contracts with a value of more R50 million are not automatically covered under the construction policies. A separate quote is provided by insurers per contract.

4.1 Contract Works

With regards to contract works claims, the contractor / consultant is responsible for the following deductibles:

All Civil Work and Earthworks excluding Runways – R300 000 deductible (excess)
Runway Rehabilitation – R300 000 deductible (excess)
New Runway Construction – R700 000 deductible (excess)
All other claims – R300 000 deductible (excess)
Other property insured – R700 000 deductible (excess)
Contractors / consultants may re-insure the deductibles

4.2 Public Liability

In the event of a claim brought against the contractor / consultant for 3rd party property damage the contractor / consultant will be responsible for a deductible (excess) of R1 025 000
In the event of a claim brought against the contractor / consultant for removal of lateral support, the contractor / consultant will be responsible for a deductible (excess) of R1 250 000
In the event of a claim for damage to aircraft, the contractor / consultant will be responsible for a deductible (excess) of R1 250 000
Contractors / consultants may re-insure the deductibles

4.3 Professional Indemnity

All consultants are responsible for Professional Indemnity cover of R10million
Contractors who have a material design element, excluding typical P & G related work, as part of their scope, are responsible for a Professional Indemnity cover of R10million
In the event of a claim above R10million, the ACSA PI cover will kick in for the amount in excess of R10m
Proof of cover in the form of a certificate of insurance should be provided to ACSA before a contract is signed between ACSA and the contractor and/or consultant.

PART 2: PRICING DATA

The *conditions of contract*

How work is priced and assessed for payment

The intended pricing strategy to be followed in this tender is according to the Price List (including the activity schedule).

1. The Contract Data, Service information, drawings and any other documents relevant to this tender must be read in conjunction with the Bills of Quantities.
2. The Contractor must plan the work in this contract as a set of activities. These should be the same activities as he shows on his programme.
3. This schedule covers the items that will be measurable. A lump sum price for each activity shall be entered and no other items will be measured. Costs not covered by the items may be included in the most appropriate items listed. The Contractor has the liberty to insert items, quantities and rates of his own choosing in the said schedule as a separate line item.
4. The pricing schedule as completed by the Contractor shall be VAT exclusive prices and shall cover, “inter alia” all general risks, liabilities, obligations, profit, expenses, costs, bonuses, all allowances such as shift and standby allowances, sick-leave, other leave, brackets, fixings, incidentals, consumables etc. that will be required to successfully complete this contract as set forth or as implied in the documents on which this Contract is based.
5. The Contractor is to take note that payment is made for each activity only when it is complete. “Complete” as it is used in this schedule means the complete system or unit as specified in the particular document.
6. Unless a separate rate for the supply and for the installation of any item is specifically called for, the supply and installation costs of any item shall be fully included in the price.
7. The description of each item shall, unless otherwise stated herein, be held to include making, conveying and delivering, unloading, storing, unpacking, hoisting, setting, fitting and fixing in position, cutting and waste, patterns, models and templates, plant, temporary works, return of packaging, establishment charges, profit and all other obligations arising out of the contractual conditions.
8. The quantities and rates included for day work shall form part of the tender price, but Contractors shall note that this item must be regarded as provisional and will only be payable to the Contractor if and when a written order to this effect has been issued.
9. “Foreign” shall mean the CIF (Cost, Insurance and Freight) value.
10. No alterations to the original text shall be allowed. If any alterations are made, they shall be ignored, and the original wording will apply.
11. Variations in the scope and extent of the work shall be allowed to meet the Engineer’s requirements and shall be measured and priced at the rates entered in the Bills of Quantities, where appropriate, and shall form an addition to or deduction from the total of the Accepted Contract Amount. Any items or variations for which rates have not been included in the Bills of Quantities shall be agreed and priced as non-scheduled items.
12. All provisional sums and contingency amounts shall be expended as directed by the Engineer and any balance remaining shall be deducted from the contract sum.

13. All items described as “provisional” shall be measured as executed and paid for according to prices in the Bills of Quantities and any amounts not spent shall be deducted from the contract price. No work for which “provisional” items are provided shall, be commenced without written instructions from the Engineer.
14. No commitment to expending any portion of the contingency amounts and/or provisional sums are made or implied by the Employer.
15. The Contractor shall not be entitled to any claim in instances where provisional sums are partially or in total removed from the contract.
16. An item against which no Price is entered will be treated as covered by other Prices or rates in the Bills of Quantities.

Refer to Appendix C under C3.1 Terms of Reference for detailed Bills of Quantities.

PART 3: SCOPE OF WORK

Document reference	Title	No of pages
	This cover page	1
C3.1	*Terms of Reference*	118
	Total number of pages	119

1 INTRODUCTION

Thembakele Consulting Engineers are appointed by ACSA to design and administer the installation of the replacement of the Fire Detection System at King Shaka International Airport located in La Mercy.

This report describes the Detailed Design of the project and discusses possible construction methodologies to minimise costs and project duration. The design complies with SANS and ACSA standards.

The fire detection system consists of:

- All addressable components such as Panels, Detectors (smoke, heat and optical types), manual call points, sirens and strobe lights,
- All non-addressable items,
- All associated cabling and containment systems,
- All intercommunication systems including fibre and copper links, and
- System interconnections between the fire detection system and currently installed baggage handling conveyers, HVAC, PA and lift systems.

The project scope further includes a condition assessment and redesign of the gas suppression systems at critical areas of the airport, i.e. substations and wire centres.

Investigations were conducted during the course of November 2019 and January 2020, where several of the key areas were visited and visual inspections were completed.

From the information gathered during these visits, the detailed design was compiled.

2 PROJECT DESCRIPTION & SCOPE OF WORK

The King Shaka International Airport (KSIA) requires replacement of the existing fire detection system. KSIA's Fire Detection system was installed in 2009.

The project scope of work includes assessing the current Fire Detection System and redesigning the system to comply with current standards. The scope also extends to the assessment and redesign, where necessary, of the existing gas suppression systems used for critical areas.

International best practice guidelines advise refurbishing a Fire Detection installation after 10 years of operation. This is particularly directed at all electronic devices, but a condition assessment must be completed for all components of the system.

Figure 0.1: Site map of KSIA

3 SITE INFORMATION

The site is located in La Mercy, North of Durban with geographical co-ordinates -29.609979, 31.116887. **Error! Reference source not found.** shows a site map of KSIA.

4 STANDARDS

All installations shall be designed, installed, and commissioned to the following standards and codes:

All current and relevant statutory regulations, codes of practice and standards applicable at the date of this specification (whether or not specifically referred to below) and, in particular, with those listed herein.

SANS 10142-1:2020 (Edition 3) - The Code of Practice for the Wiring of Premises, with the latest amendments.

SANS 10139:2021 (Edition 4.00): Fire detection and alarm systems for buildings.

SANS 10400 – Part T:2020 (Edition 4.00): Fire Protection

SANS 14520-1:2019 (Edition 4.00) - Gaseous fire-extinguishing systems - Physical properties and system design Part 1: General requirements.

Occupational Health and Safety Act 85 of 1993 as applicable to both contractor (employee) and employer, with particular reference, but not limited, to the following sections:

- Health and Safety Policy
- General duties of employers to their employees
- Duty to inform
- General duties of employees at work
- Duty not to interfere with, damage or misuse things
- Health and Safety Representatives
- Functions of Health and Safety Representatives
- Report to inspectors regarding certain incidents
- Report to Chief Inspector regarding occupational disease
- Victimization forbidden
- Investigations
- Disclosure of information
- Acts or omissions by employees or mandataries
- Offences, penalties and special orders of court
- Proof of certain facts
- Exemptions
- This Act not affected by agreements
- Delegation and assignment of functions

Ethekwini Municipality bylaws, as amended.

5 HEALTH AND SAFETY

5.1 HEALTH AND SAFETY REQUIREMENTS AND PROCEDURES

The Service Manager shall be entitled to fine the Contractor an amount of R2000.00 for each non-conformance to Health and Safety matters. This shall not transfer any of the Contractor's responsibilities in this regard to the Employer by any means.

The Contractor shall be fully responsible for compliance to the Occupational Health and Safety Act for all persons, equipment and installations relating to this Contract. The Contractor is expected to sign the undertaking in this regard as attached in the annexes.

It shall be the Contractor's responsibility to ensure that all relevant labour and safety legislation is adhered to in scheduling staff.

All persons on company premises shall obey all health and safety rules, procedures and practices.

In particular, **NO SMOKING** signs and the prohibition of the carrying of smoking materials in designated areas shall always be obeyed. A copy of the Safety Rules booklet is available on request from the ACSA Safety Department.

All the applicable requirements of the Occupational Health and Safety Act (1993) and Regulations and any amendments thereto, shall be met. Where the OHS Act prescribes certification of competency of persons performing certain tasks, proof of such certification shall be provided to the Service Manager.

The contractor's Workmen's Compensation fees must be up to date. A copy of the Contractor's WCA registration shall be produced on request.

The following areas in the company are declared as **"HOT WORKS PERMIT"** areas:

- ✓ All airside areas
- ✓ All basement areas
- ✓ All areas accessible to the public
- ✓ All enclosed areas
- ✓ The terminal building

Any process in the above-mentioned areas involving open flames, sparks, or heat shall be authorised by the issue of a permit to work - obtainable from the ACSA Safety department. Any work done under the protection of a permit to work shall be in strict compliance with every prescription regarding the permit.

Safety equipment shall be used where applicable (e.g. safety, goggles, boots, harness, etc.) The Contractor, at his/her own expense shall provide such equipment, for his/her employees. The Contractor shall apply the necessary discipline and control to ensure compliance by his workers.

All Contractors must ensure that his/her employees are familiar with the existing emergency procedures and must co-operate in any drills or exercises, which might be held. Emergency / fire equipment and extinguishers shall not be obstructed at any time

No person shall perform an unsafe / unhygienic act or operation whilst on Company premises.

No unsafe/dangerous equipment or tools may be brought onto or used on Company premises. The Company reserves the right to inspect all equipment/tools at any time and to prevent/prohibit their use, without any penalty to the Company and without affecting the terms of the Contract in any way.

The Company reserves the right to act in any way to ensure the safety/security of any persons, equipment or goods on its premises and will not be liable for any costs or loss evoked by the action.

This includes the right to search all vehicles and persons entering, leaving or on the premises and to inspect any parcel, package, handbag and pockets. Persons who are not willing to permit such searches may not bring any such items or vehicles onto the premises.

5.2 GENERAL

The Contractor shall maintain good housekeeping standards in the area where he is working for the duration of the contract.

At no time must the Contractor interfere with, or put at risk, the functionality of any Sprinklers and/or fire prevention system. Care must also be taken to prevent fire hazards.

The Contractor is required to issue all staff with standard uniforms. This shall as a minimum include:

- ✓ Safety shoes, overalls (clearly marked with Contractor's company logo) and numbered reflective jackets (as per Airport requirements).
- ✓ All costs relating to uniforms shall be for the Contractor's account.

5.3 CELL PHONES AND TWO-WAY RADIOS

Use of cell phones on airside is not permitted unless the user is in possession of an appropriate Airport permit for the device. Cell phone permit issuing authority lies with the ACSA Security department.

The Contractor will not be allowed to use two-way radios at the Airport unless these radios are of the type, model and frequency range as approved by the ACSA IT department.

5.4 PROTECTION OF THE PUBLIC

The Contractor shall take special care in order not to harm or endanger the public in any way. Work shall be sufficiently hoarded and guarded in order to safeguard children and the general public from injury relating to machinery, work or other.

5.5 BARRICADES AND LIGHTING

Where hoarding, barricades or lighting is required in the execution of the Works, the Contractor shall provide same at his/her own expense. Hoarding, barricades and lighting shall comply with industry accepted norms and standards and may not be used for purposes of advertising or any other purpose than safeguarding the Works.

6 EXISTING FIRE DETECTION SYSTEM AT KSIA

A brief schedule of the existing fire equipment is shown in **Error! Reference source not found.** indicating the type and location of the system.

Table 6.1: Location of Fire Panels

SYSTEM	DESCRIPTION	LOCATION	QTY
Fire Detection System	SCADA System	Terminal Office Control (TOC)	1
Fire Detection System	Panel 2	ATNS Tower Fire System	1
Fire Detection System	Panel 3	Terminal Basement	1
Fire Detection System	Panel 4	Terminal Building Departures	1
Fire Detection System	Panel 5	Terminal Building Arrivals	1
Fire Detection System	Panel 6	Terminal Building Arrivals	1
Fire Detection System	Panel 7	Terminal Building Arrivals	1
Fire Detection System	Panel 8	Terminal Building Departures	1
Fire Detection System	Panel 9	Domestic Arrivals Corridor	1
Fire Detection System	Panel 10	Terminal Office Control (TOC)	1
Fire Detection System	Panel 11	Multi Storey Office (MSO)	1
Fire Detection System	Panel 12	Cooling Towers	1
Fire Detection System	Panel 13	Airfield Substation AS1	1
Fire Detection System	Panel 14	Airfield Substation AS2	1
Fire Detection System	Panel 15	Airfield Substation AS3	1
Fire Detection System	Panel 16	Airfield Substation AS4	1
Fire Detection System	Panel 17	Maintenance Buildings	1
Fire Detection System	Panel 18	SAA Maintenance Building	1
Fire Detection System	Panel 19	Crash Fire & Rescue	1
Fire Detection	Panel 21	Fuel Farm	1

SYSTEM	DESCRIPTION	LOCATION	QTY
System			
Fire Detection System	Panel 22	Fuel Depot	1
Crash Alarm System	Panel 1	Fire & Rescue Building	1
Crash Alarm System	Panel 2	ATNS Tower Building	1
LPG Gas Detection & Monitoring	Panel 1&2	Terminal Basement	2

The existing fire detection system with location of each panel and number of devices is shown in **Error! Reference source not found.**.

Table 6.2: Location of each panel and number of devices

DESCRIPTION	LOCATION	NO OF DEVICES
Panel 1	Cargo Terminal	362 devices
Panel 2	ATNS Tower Fire System	254 devices
Panel 3	Terminal Basement	458 Devices
Panel 4	Terminal Building Departures	452 Devices
Panel 5	Terminal Building Arrivals	452 Devices
Panel 6	Terminal Building Arrivals	223 Devices
Panel 7	Terminal Building Arrivals	325 Devices
Panel 8	Terminal Building Departures	394 Devices
Panel 9	Domestic Arrivals Corridor	186 Devices
Panel 10	Terminal Office Control (TOC)	399 Devices
Panel 11	Multi Storey Office (MSO)	271 Devices
Panel 12	Cooling Towers	111 Devices
Panel 13	Airfield Substation AS1	32 Devices
Panel 14	Airfield Substation AS2	25 Devices
Panel 15	Airfield Substation AS3	25 Devices
Panel 16	Airfield Substation AS4	32 Devices
Panel 17	Maintenance Buildings	110 Devices
Panel 18	SAA Maintenance Building	23 Devices
Panel 19	Crash Fire & Rescue	127 Devices
Panel 21	Fuel Farm	54 Devices
Panel 22	Fuel Depot	17 Devices
Panel 23	T1 Substation (Test / Training Panel)	13 Devices

Currently, Panel 10 is configured to be the system "Master" and is located in the TOC offices, within the Terminal Building. Furthermore, Panel 19 at Fire and Rescue is also a global panel, i.e., a panel to which all panels report their status, alarm and fault conditions. The SCADA system located adjacent Panel 10 is not operational.

A summary for the quantities for the line devices currently installed, is shown in **Error! Reference source not found.** below.

Table 6.3: Summary of Line Device Quantities

LINE DEVICES	QTY (UNITS)
Ziton ZP720 Addressable Thermal Detector	15
Ziton ZP730-2P Addressable Optical smoke detector - Polar White	3113
Ziton ZP785-3 Manual Call Point, red, flush mount with EN54 marking	288
Ziton ZP740/5-T24 Addressable Line Interface Unit	54
Ziton ZP740/5-T53 Control Switch	1
Ziton ZP570/A70 Conventional Zone Interface	1
Ziton Addressable Mains Relay Module ZP750/A51	409
Extinguishing Control Unit (ECU)	59
Ziton ZP732-2P Addressable Combination Smoke and Heat Detector - Polar White	34
Emulated Control Switch	1
Ziton ZP754 Addressable Sounder with Visual Indicator (RED)	9
Ziton ZP755HAV-2R Addressable Sounder with Visual Indicator (RED)	288
Ziton ZP720-3P Addressable Thermal Detector - Polar White	96
TOTAL LINE DEVICES =	**4368**

Error! Reference source not found. below shows how the existing system is connected. There are several links between panels that are via copper cable. Typically, this would not pose a bottleneck limitation due to the low bandwidth requirement and relatively short distances between this cluster of panels, all of which are located within the Terminal building.

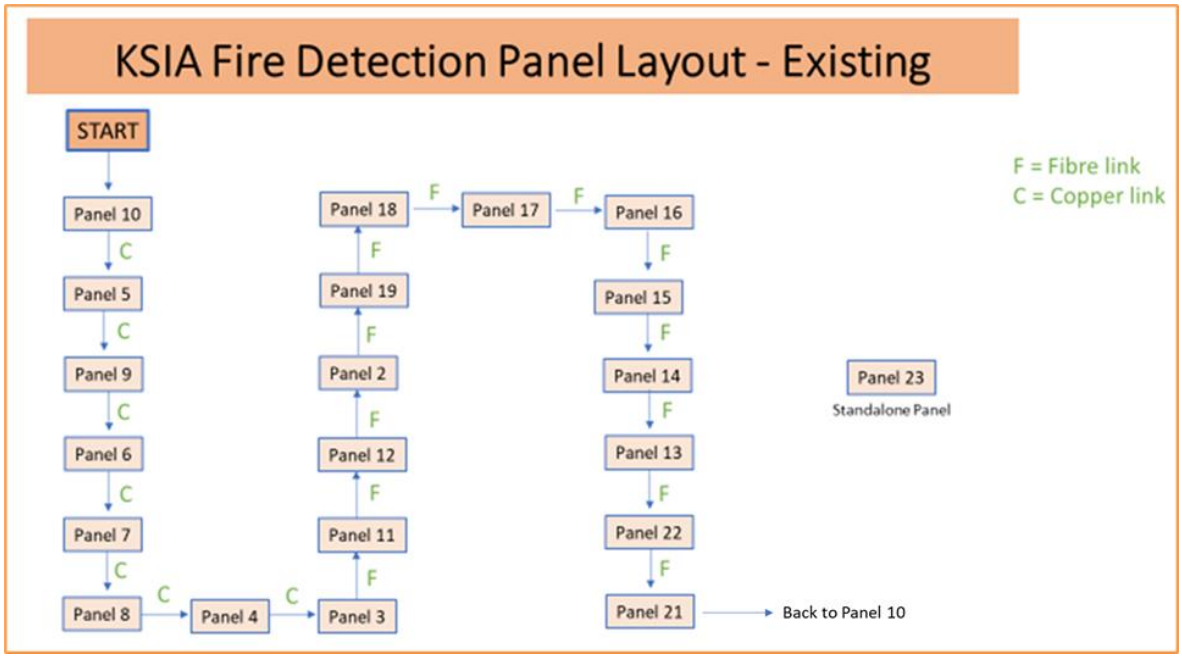

Figure 6.2: KSIA Existing Fire Panel connection layout

The gas suppression system with gas type, location and quantity of gas units is shown in **Error! Reference source not found.**.

Table 6.4: Schedule of Gas Suppression System

GAS TYPE	SIZE (LITRES)	LOCATION	QTY
FM200	175	Terminal Basement - LV Switchgear Room	4
FM200	45	Terminal Basement - Transformer Chamber Room	3
FM200	45	Terminal Basement - LV Chamber Room	3
FM200	45	Terminal Basement - M1 Main Substation	3
FM200	175	Terminal Basement - UPS Room 2	5
FM200	45	Terminal Basement - UPS Room 2	2
FM200	100	Terminal Basement - UPS Room 2	1
FM200	25	Terminal Basement – 107 Storeroom	2
FM200	45	Terminal Basement – Core Room 1 WC01	3
FM200	175	Terminal Basement – Core Room1 WC01	1
FM200	175	Terminal Basement – Core Room 2 WC03	1
FM200	45	Terminal Basement – Core Room 2 WC03	3

GAS TYPE	SIZE (LITRES)	LOCATION	QTY
FM200	100	Terminal Basement – Core Room 2 WC03	1
FM200	45	Terminal Basement – UPS Room 2	4
FM200	175	Terminal Basement – UPS Room 2	1
FM200	45	Terminal Basement - Neotel	4
FM200	45	Terminal Basement - Telkom	4
FM200	45	Terminal Basement – PFC Room	2
FM200	100	Terminal Basement – SETA Core Room 1	1
FM200	45	Terminal Basement – SETA Core Room 1	1
FM200	45	Terminal Basement – SETA Core Room 2	2
FM200	45	Terminal Basement – 108 Storeroom	2
FM200	45	Airfield Substation AS1	6
FM200	45	Airfield Substation AS2	6
FM200	45	Airfield Substation AS3	6
FM200	45	Airfield Substation AS4	6
FM200	25	ATNS Tower Substation	4
FM200	45	ATNS Tower Substation	2
FM200	45	A2 Airside Substation	11
FM200	45	TOC Electrical Cabinet	2

7 GAS SUPPRESSION SYSTEMS

In general, the following scope of works applies to the Gas Suppression System:

- ✓ Replace all gas fire suppression cylinders (Refer to **Error! Reference source not found.** for sizes and quantities of gas fire suppression cylinders).
- ✓ Add Gas Control Units (GCUs) and Cylinders to substations, wire centres, server rooms that are not already equipped.
- ✓ Replace all passive ventilation-suppression systems, i.e., door blankets.

It is recommended that the existing FM200 fire suppression system is retained due to the following reasons:

- It is still widely used in the industry, being the industry norm for the applications under consideration.
- This status quo provides the necessary system support with regards to:
  - Gas production facilities,
  - Spares availability,
  - Industry knowledge
  - Research and development into the refinement of this technology.
- The existing system uses FM200 gas.

- ACSA maintenance and operational staff are familiar with the system with regards to the way it works and its maintenance requirements.

8 SCOPE OF WORK

This section discusses the Scope of Work of the project. The Fire Detection System is to have the target protection level for people as Category L1 and for property as Category P1 described in SANS 10139. A complete specification document is attached in APPENDIX A – WORKS SPECIFICATION.

8.1 FIRE PANELS

The following items will address the problems identified with Fire Panels:

- ✓ Replace all Ziton ZP2/ZP3 fire panels with new fire panels.
- ✓ Battery chargers to be supplied for all new fire panels
- ✓ Panels must be flush mounted in high traffic areas to prevent damages to panels or housings.
- ✓ Panel 10 must be:
  - Relabelled as Panel 1.
  - Configured to operate with the existing Supervisory Control and Data Acquisition (SCADA) system.
  - Relocated to IMC in the MB3 Building.
  - The new Panel 1 will replace Panel 17 in the Maintenance Building.
- ✓ Panel 1 and Panel 2 to be
  - Relabelled
  - Configured to Crash Alarm System in Fire Rescue Building and ATNS Tower Building respectively.
  - Configured with LPG Gas Detection & Monitoring System in Terminal Basement.
- ✓ Ensure that equipment interfacing with the fire panels via relays and interface modules are working e.g. extractors in terminal building or air vents in substations. All relays and interface modules to be replaced.
- ✓ Connect the fire detection system to the controller for the transformers/generators which monitor their own output temperature and fire with Programmable Logic Controller (PLC).
- ✓ The installation and configuration of a locking system (keypad with electronic lock) for each fire panel such that it can be accessed via a universal key code that is known by relevant staff members. This locking system is required mainly for panels that are in high public traffic areas, areas where tenant staff have access to and where an appointed person is not available.
- ✓ The electronic locking system for each Fire Panel must:
  - Be supported by a long-life battery with a minimum design life of 5 years.
  - Have a bypass mechanism so that the enclosure is accessible in the event of a battery failure.
  - Unlock the door and raise an alarm via SCADA indicating battery failure.

Figure 8.1 below shows the proposed connectivity between panels. The new fibre links are shown in red.

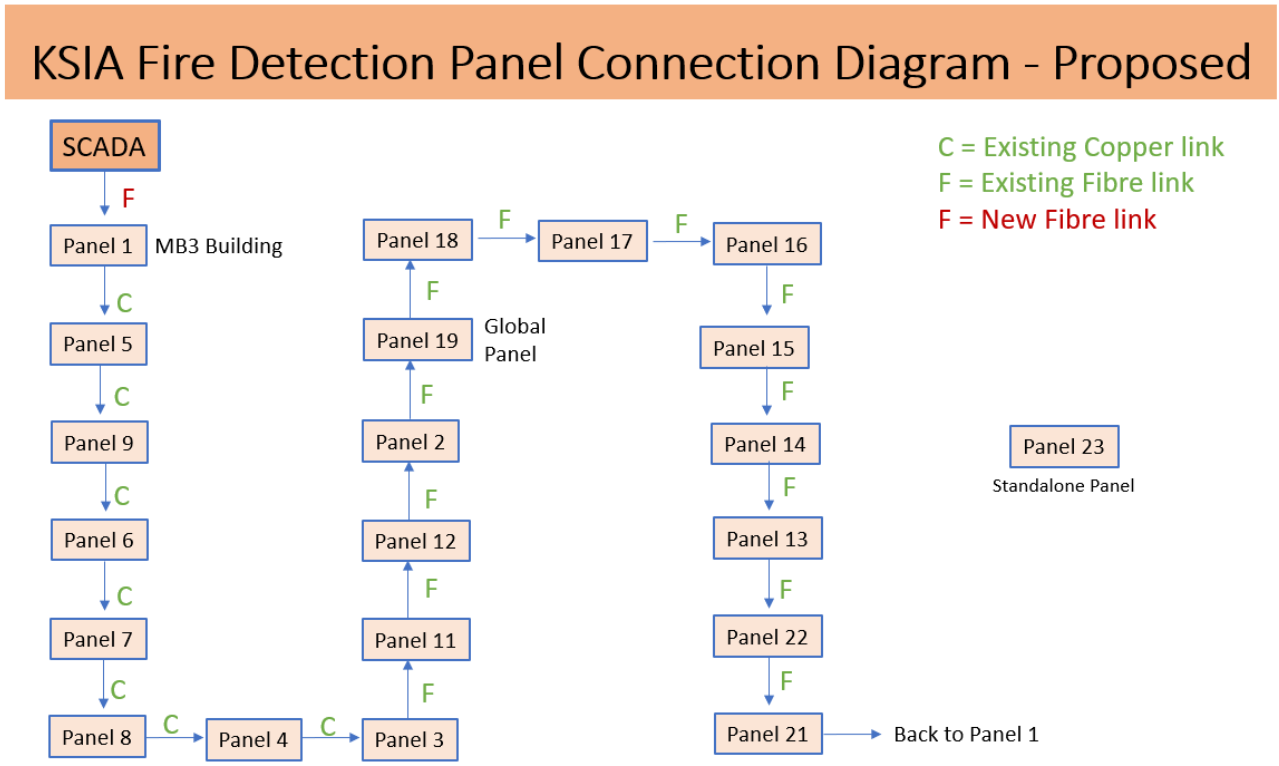

Figure 8.3: Diagram showing the new Connectivity between Panels

8.2 LINE DEVICES

The sections below provide the Scope of Work for the various items that, together, form the whole Fire Detection system.

Name brands of the existing devices are mentioned for information and reference purposes only. It is **not** a requirement of this project that the existing brand be retained. The existing bases of the devices will be retained, and any proposed devices should be compatible with the existing Ziton bases. The proposed products for the respective devices and SCADA system should be opensource, commercially available and not restricted to certain OEM parts. The focus of the project is to upgrade the system, using the best of breed technologies and systems available in the market today. The fire detection system should not be proprietary in any way and should adhere to local available content as far as practically possible.

As such, all line devices must be individually and directly addressable. Conventional, i.e. non-addressable, line devices will not be acceptable.

The locations and layouts for line devices is provided in the drawings for this project.

8.2.1 SMOKE DETECTORS

- ✓ Replace all Ziton ZP730-2P Addressable Optical smoke detector - Polar White with new units.
- ✓ Keep bases to save on cost, time and labour. Where a base has discoloured due to age, pollution or exposure to sunlight, it must be replaced.
- ✓ Brittle, chipped or broken bases must be replaced.
- ✓ Redesign some rooms to ensure fire detection by smoke detectors is compliant as per SANS 10139.
- ✓ Label all devices according to ACSA's labelling standard.

8.2.2 MANUAL CALL POINTS

- ✓ Replace all Ziton ZP785-3 Manual Call Point, red, flush mount with EN54 marking with new units.
- ✓ Manual call points in high traffic areas (especially in the basement areas) must be flush mounted to prevent damage to the units.
- ✓ Label all devices according to ACSA's labelling standard.

8.2.3 INTERFACE UNITS

- ✓ Replace all Ziton ZP740/5-T24 Addressable Line Interface Unit with new units.
- ✓ Interface equipment that is not already interfaced with the fire panel that poses a greater danger if a fire does occur. For example, the HVAC must shut-off if a fire occurs.
- ✓ Contractors must confirm the interface points (e.g., HVAC, lifts, exit doors, PA systems etc.) and configure the system accordingly. System configurations and functional elements must be approved by the Engineer and ACSA project team.
- ✓ Label all devices according to ACSA's labelling standard.

8.2.4 CONTROL SWITCH

- ✓ Replace all Ziton ZP740/5-T53 Control Switch with new units.
- ✓ Label all devices according to ACSA's labelling standard.

8.2.5 CONVENTIONAL ZONE INTERFACE

- ✓ Replace all Ziton ZP570/A70 Conventional Zone Interface with new units.
- ✓ All GCUs will be connected to the FCP via an addressable I/O module. One I/O module per GCU is allowed for in the project.

- ✓ Label all devices according to ACSA's labelling standard.

8.2.6 RELAYS

- ✓ Replaces all Ziton Addressable Mains Relay Module ZP750/A51 with new units.
- ✓ Label all devices according to ACSA's labelling standard.

8.2.8 COMBINATION SMOKE AND HEAT DETECTORS

- ✓ Replace all Ziton ZP732-2P Addressable Combination Smoke and Heat Detector - Polar White with news units.
- ✓ Keep bases to save on cost, time and labour. Where a base has discoloured due to age, pollution or exposure to sunlight, it must be replaced.
- ✓ Brittle, chipped or broken bases must be replaced.
- ✓ Label all devices according to ACSA's labelling standard.

8.2.9 EMULATED CONTROL SWITCH

- ✓ Replace Emulated Control Switch with news units.
- ✓ Label all devices according to ACSA's labelling standard.

8.2.10 SOUNDERS

- ✓ Replace all Ziton ZP754 Addressable Sounder with Visual Indicator (RED) with news units.
- ✓ Ziton ZP755HAV-2R Addressable Sounder with Visual Indicator (RED) with new units.
- ✓ Label all devices according to ACSA's labelling standard.

8.2.11 THERMAL DETECTORS

- ✓ Replace all Ziton ZP720-3P Addressable Thermal Detector - Polar White with new units.
- ✓ Replace all Ziton ZP720 Addressable Thermal Detector with new units.
- ✓ All bases must be replaced.
- ✓ Redesign fire detection for areas like restaurants for thermal detection rather than smoke detection to avoid nuisance fire alarms.
- ✓ Label all devices according to ACSA's labelling standard.

8.2.12 GAS CONTROL UNITS (GCU)

- ✓ Replace all GCUs with new units.
- ✓ Upgrade housing of externally mounted GCU panels to weatherproof and low maintenance design, as indicated in the Bill of Quantities (Appendix C). The following Panels have externally mounted ECUs:
  - Panel 2
  - Panel 3
  - Panels 13 to 16
- ✓ Replace all outdoor Gas Control Unit housings with new housing.
- ✓ Housings must be:
  - IP54 rated
  - Have a tinted plexiglass door within a suitably wide frame such that all indications and labels on the GCU are visible.
  - Integrate a 3cm x 3cm clear section to allow for easy viewing of internal elements.
  - Accessible using a standard square hole electrical panel key.
- ✓ All GCUs must be tested for control and alarming functions.
- ✓ All GCUs will be connected to the FCP via an addressable I/O module. One I/O module per GCU is allowed for in the project.
- ✓ Label all devices according to ACSA's labelling standard.

8.3 SMOKE BEAMS

The following scope of work applies for this project:

- ✓ All smoke beams to be replaced with OSID beams.
- ✓ Redesign of fire detection in areas using OSID beams – to be completed by appointed contractor and approved by Engineer and ACSA representatives.
- ✓ OSID beams must be able to communicate with Fire Panels / fire detection systems from a different vendor to the OSID beam manufacturer.

8.4 EMERGENCY EVACUATION SYSTEM

The Emergency Evacuation system will utilise the existing PA system. It must be configured as a manual and not fully automatic system. Whilst the PA systems cannot be set to FULL manual control, specific functions must remain manual.

PA system must be configured to work as follows:

- The alarm will go out on the PA system.
- The alarm will be paused while the pre-recorded message is transmitted.
- After the pre-recorded message is played, the siren must go on again.
- It must be zoned to particular areas so the whole airport is not evacuated in case of an emergency unless all areas are affected.

Contractors need to identify the interface points and independently configure the system. System configurations and functional elements must be approved by the Engineer and ACSA project team.

8.5 CABLING

- ✓ Replace all FR20 cabling with PH30 rated cabling that is compliant with SANS 10139, as amended.
- ✓ Replace 20 mm conduits with 25 mm PVC conduits
- ✓ In ceiling voids, run fire detection in separate conduits.
- ✓ Replace trunking with fire rated trunking.
- ✓ Label conduits to ensure easy identification.
- ✓ All fire cabling to run in separate conduits / sleeves / trays from other service, such as electrical power, data, security.
- ✓ To achieve some savings, where PH 30 cabling is already installed, new cable will not be installed. Examples of exemptions to this guideline are:
    - To eliminate joints,
    - Where cables are damaged, or
    - In cases where re-routing is necessary.

  The Bills of Quantities has included Cabling as a remeasurable item and has allowed, in budget terms, for the entire system to be rewired.

8.6. PASSIVE FIRE PROTECTION

- ✓ Install fire curtains to seal rooms as efficiently as possible. This is to ensure that suppression gas concentrations are contained as long as possible. The Bill of Quantities has included fire curtains as a remeasurable item and has allowed for a reasonable quantity.
- ✓ Fireproof seals to be installed in penetrations and cable trenches in order to seal rooms (like substations, server rooms, wirerooms, transformer rooms, generator rooms and similar). The Bill of Quantities has included Fireproof seals as a remeasurable item and has allowed for a reasonable quantity.
- ✓ Intumescent painting of each cable that penetrate through walls, ceilings and floors. The Bill of Quantities has included Intumescent painting as a remeasurable item and has allowed for a reasonable quantity.

8.7. MSO BUILDING OFFICES

- ✓ The 3rd floor of the MSO building is already undergoing a refurbishment project.
- ✓ BVI Consulting Engineers are the appointed Electrical Engineers to that project.
- ✓ BVI's project shall allow for and install the line devices that are required on that floor.
- ✓ All these line devices will be connected to Panel 11 in the MSO Building.

8.8 GAS SUPPRESSION SYSTEM UPGRADE

All gas installations must be replaced, except for those systems upgraded in 2018/2019. These systems are listed in **Error! Reference source not found.** below.

Table 8.5: Gas systems refurbished during 2018/2019

Area	Upgrade Notes	Mapped to Area	Panel No.	Existing Capacity	Required Capacity	Upgrade Requirement
ATNS	4x25 litre FM200 New 2x45 litre FM200 New	Control Tower	1	4x45	1x150 2x50 1x80	1x150 1x50
AS 4 Substation	1x25 litre FM200 New.	AS4 SS	16	4x45	2x50 1x100 1x120	2x50 1x100 1x120
AS 3 Substation	2x45 litre FM200 Refilled.	AS3 SS	15	4x45	2x50 2x80	2x80
Basement Chamber 1	1x175 litre New.	Basement UPS Room 2	3	175	1x100	None

Area	Upgrade Notes	Mapped to Area	Panel No.	Existing Capacity	Required Capacity	Upgrade Requirement
Transformer chamber	2x45 litres Refilled. 1x45 litre New.	Basement - Transformer Room	3	4x45	2x180	1x180 1x50
Core Room 1	1x45 litre Refilled. 1x175 litre Refilled.	Basement - Core Room 1 WC07	3	3x45	1x80	None
Core Room 2	1x175 litre Refilled.	Basement - Core Room 2 WC03	3	1x100	2x120	1x50
UPS Room 1	1x175 litre New.	Basement - UPS Room 1	3	4x45	2x100	1x25
Power Factor	2x45 litre Refilled.	Basement - PFC Room	3	2x45	1x100	None

The Scope of Work entails, but not limited to, the following tasks:

- ✓ Upgrade of an existing system. Those installations that require additional capacity will have additional tanks installed.
- ✓ Downgrade of a system. These systems shall be replaced.
- ✓ The following items within each installation must be replaced:
  - Manual release device.
  - Pressure gauge
  - Discharge hose
  - Container strap
  - Nozzles
  - Piping
  - Pump control systems
  - Audio visual alarms
  - Instrumentation
  - Signage
  - Door blankets.
- ✓ Pressure testing of rooms with gas suppression systems installed to be conducted after upgrading of gas cylinders and passive fire protection applied.

Error! Reference source not found. below provides a list of the areas that require upgrades to the Gas suppression systems.

Contractors must be qualified and certified to complete the works satisfactorily.

Table 8.6: List of facilities requiring Gas Suppression Upgrade

Location	Additional Cylinders (Litres)	Additional Cylinders (Qty)
Control Tower - Gate House and Substation: 11KV Room	150	1
Control Tower - Gate House and Substation: TRF 1 Room	50	1
Trade Zone Substation - Telkom Room	80	1
Trade Zone Substation - Neotel Room	80	1
Airfield Substation AS1 - Trf 1 Room	50	1
Airfield Substation AS1 - Trf 2 Room	50	1
Airfield Substation AS1 - Main LV Room	120	1
Airfield Substation AS1 - MV Switchroom	100	1
Airfield Substation AS2 - Trf 1 Room	50	1
Airfield Substation AS2 - Trf 2 Room	50	1
Airfield Substation AS2 - Main LV Room	80	1
Airfield Substation AS2 - MV Switchroom	80	1
Airfield Substation AS3 - Main LV Room	80	1
Airfield Substation AS3 - MV Switchroom	80	1
Airfield Substation AS4 - Trf 1 Room	50	1
Airfield Substation AS4 - Trf 2 Room	50	1
Airfield Substation AS4 - Main LV Room	120	1
Airfield Substation AS4 - MV Switchroom	100	1
Terminal Building – Airside Corridor Plant Room Switch Room (Panels)	150	2
Terminal Building – Airside Corridor Plant Room Transformer Room	180	1
Terminal Building – Airside Corridor Plant Room 11KV Room	100	1
Terminal Building – BCOCC IT Core Room	50	1
Terminal Building – Airline Offices IT Comair WC29	15	1

Location	Additional Cylinders (Litres)	Additional Cylinders (Qty)
Terminal Basement – LV Switchgear Room	150	2
Terminal Basement – Transformer Room	180, 50	1 each
Terminal Basement – 11KV Room A1	100	2
Terminal Basement – 11KV Room M1	100	2
Terminal Basement – Neotel	80	1
Terminal Basement – Telkom	80	1
Terminal Basement – UPS Room 1	25	1
Terminal Basement – SETA Core Room 2	80	1
Terminal Basement – SETA Core Room 3	50	1
Terminal Basement – Core Room1 WC01	120	2
Terminal Basement – Core Room 2 WC03	50	1
Terminal Basement – SITA Core Room 2 WC04	120	1

8.9 FIBRE UPGRADE

The new Master Panel envisaged to be installed in the MB3 building shall be connected to Panel 5 via a fibre interface. This technology decision provides the following benefits:

- ✓ Ensuring the highest possible data throughput between back-haul devices.
- ✓ Optimising outages / equipment availability during equipment failure and / or maintenance activities.
- ✓ Minimal interference during communications.

Error! Reference source not found. below shows which links between panels will be upgraded.

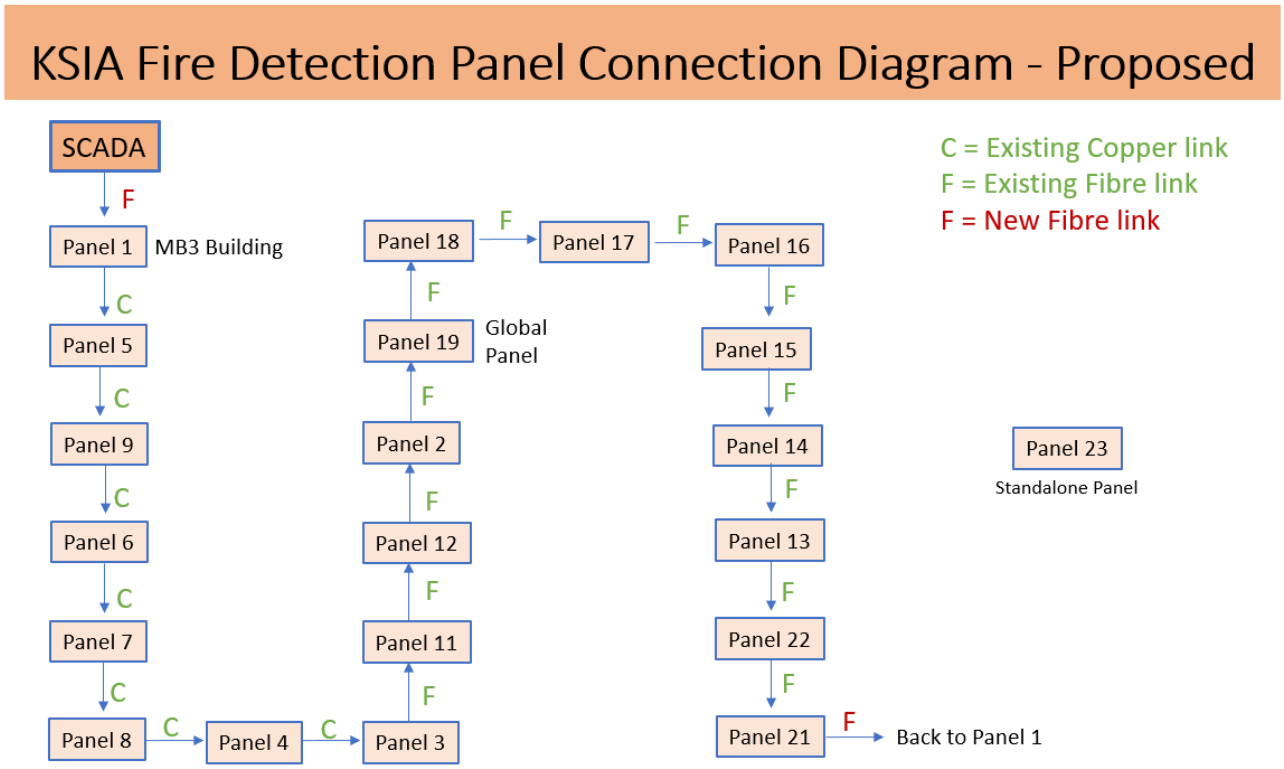

Figure 8.4: New fibre links

From **Error! Reference source not found.**, the following Panels will be upgraded with new Fibre links:

- ✓ Panel 1 (Old Panel 17).

The fibre must be contained within a minimum of 4 way 12/10 microduct and be a new 24-core micro-fibre G.652D. Active and passive patching to cabinets must be included.

8.10 SUPERVISORY CONTROL AND DATA ACQUISITION (SCADA)

The new SCADA system for the Fire Detection System will be installed at Information Maintenance Control (IMC) Department also known as Help Desk at the Maintenance Buildings where all other BMS SCADA systems are located. The Fire Detection System will not be integrated to the existing BMS SCADA but will be a separate SCADA system. The new SCADA system must be compatible with all parts of the Fire Detection System.

9 PROJECT CONSTRUCTABILITY

9.1 FIRE DETECTION REPLACEMENT

It is proposed that the panels be replaced in reverse order of their proximity to Panel 10, the Master Panel. The rationale behind this approach is that working on the further reaches of the Fire detection system will result in quicker turnarounds due to these areas being less populated. Working on these panels first:

- ✓ Poses less risk to the system and to airport safety concerns.
- ✓ Allows the project team time to "settle in", in terms of working with ACSA and the various logistical, safety and security requirements for the project.

As a National Key Point, the airport is a live facility, continuously occupied by ACSA and airline staff, contractors, tenants and the general public. Therefore, as safety and continuity of operations is of paramount importance, the following construction sequence is proposed:

STEP 1 – install a second Master station in parallel to Panel 10 located in Terminal Office Centre (TOC). This will be the new Panel 1.

By installing a second Master panel in parallel, the existing system is kept intact and alive, allowing work on the new installation to proceed unencumbered.

The new Master Panel (Panel 1) must be configured to interface with the airport's existing SCADA system.

STEP 2 onwards shall follow the sequence in **Error! Reference source not found.** below

Table 9.7: Constructability Sequence

WBS	TASK	DURATION (Days)
1	Project Site Handover	1
2	Safety Induction and Permits	10
3	Project Kick-off meeting	1
4	Site Establishment	5
5	Panel 1 installation (also replaces Panel 17)	7
6	SCADA - integration of main panel into existing SCADA	15
7	New Fibre installation to Panel 22 (Fuel Depot)	12
8	Fire Detection System Panel 21 (Fuel Farm)	3
9	Fire Detection System Panel 22 (Fuel Depot)	1
10	Fire Detection System Panel 13 (Airfield Substation AS1)	2
11	Fire Detection System Panel 14 (Airfield Substation AS2)	2
12	Fire Detection System Panel 15 (Airfield Substation AS3)	2
13	Fire Detection System Panel 16 (Airfield Substation AS4)	2

WBS	TASK	DURATION (Days)
14	Fire Detection System Panel 18 (SAA Maintenance Building)	2
15	Fire Detection System Panel 19 (Crash Fire & Rescue)	8
16	Crash Alarm System Panel 1 (Fire & Rescue Building)	8
17	Fire Detection System Panel 2 (ATNS Tower Fire System)	15
18	Crash Alarm System Panel 2 (ATNS Tower Building)	15
19	New Fibre installation to Panel 10 (TOC)	18
20	Fire Detection System Panel 10 (TOC)	23
21	Fire Detection System Panel 11 (Multi Storey Office (MSO))	16
22	Fire Detection System Panel 12 (Cooling Towers)	7
23	Fire Detection System Panel 3 (Terminal Basement)	26
24	Fire Detection System Panel 4 (Terminal Building Departures)	26
25	Fire Detection System Panel 5 (Terminal Building Arrivals)	26
26	Fire Detection System Panel 6 (Terminal Building Arrivals)	13
27	Fire Detection System Panel 7 (Terminal Building Arrivals)	19
28	Fire Detection System Panel 8 (Terminal Building Departures)	22
29	Fire Detection System Panel 9 (Domestic Arrivals Corridor)	11
30	LPG Gas Detection & Monitoring Panel 1&2 (Terminal Basement)	10

9.2 GAS SYSTEM REPLACEMENT

It is envisaged that the gas suppression system upgrade will be executed in parallel with the Fire Detection works, due to different skill sets and possibly separate contractors being used.

In terms of a procurement strategy, it may be prudent to explore the option of establishing a separate contract for the Gas Suppression Refurbishment works package.

9.3 CONSTRUCTION SCHEDULE

Tenderers must submit a preliminary project schedule with the tender submission. Within three weeks of appointment, the successful tenderer will submit a final project schedule which will be used as the official Project Schedule for the project.

Tenderers must take note of the following when compiling the schedule:

- ✓ The contractor will have separate teams, or sub-contractors for:
  - Gas Suppression System Installation
  - Fibre installation

  due to different skill sets and tool sets being required for these tasks when compared to the main contract Scope of Works.

- ✓ Work will be completed during normal hours in low volume traffic areas, and during normal and off-peak hours in high volume traffic areas.
- ✓ Allow for co-ordination between stakeholders including all tenants, ACSA and airline staff, etc. to ensure that they are aware of the works and will make their spaces accessible to the contractor.
- ✓ The Project Schedule must take cognisance of the annual shutdown periods between December and January.
- ✓ Public holidays must be accounted for.

9.4. PROJECT MEETINGS

It is anticipated that the following project meetings will be held:

- ✓ **Project Kick-off meeting** – Held at the beginning of the project with a standard project commencement agenda.
- ✓ **Project Technical meetings** – initially twice a month for the first four months, thereafter once a month. All technical related matters will be discussed.
- ✓ **Project Progress meetings** – held once a month. All progress related matters will be discussed. If progress falls behind the program, the frequency of these meetings may be increased to effectively manage the project.
- ✓ **Risk Reduction Meetings** – these meetings will be held on an ad-hoc basis, typically when progress falls behind the agreed programme. The intention of these meetings is for both the contractor and client to raise any concerns regarding potential project risks, and devise methods to mitigate these risks in such a manner that the project programme and budget are not adversely affected.
- ✓ **Project Close-Out meeting** – this is held after the Client Sign-off on the project.

10 DRAWINGS

Appendix B includes the Drawing Register which shows a list of all drawings that form part of the Detailed Design package. Drawings will be made available via downloadable link.

11 BILLS OF QUANTITIES

A blank BoQ is included in Appendix C. A protected Excel version of this document may be made electronically available to:

- ✓ Make it easier for the contractors to complete.
- ✓ Minimise pricing errors.

CONSULTANT SPECIFICATION

Analogue Addressable (Intelligent) Fire Detection System

Table of Contents

1. Scope of Work

1.1 To design, supply and install an Analogue Addressable Fire Alarm Control System in accordance with the details specified herein and in accordance with supplied drawings.

1.2 The system shall include all materials, equipment and wiring required to install the complete Fire Detection and Alarm System. The system shall include, but not be limited to, one or more control panels, repeater panels, and sensors, call points, audible and visual alarm indicating devices and relays.

1.3 The system components shall be freely available from a number of sources, (i.e. not a closed protocol system)

1.4 The installation shall include the laying of all cables required for connection of the detection, alarm indicating and other devices along with connections to the power supply as appropriate to the design. All cabling shall conform to the requirements and recommendations of the Fire Alarm Control Panel manufacturer. Any openings /chasings in walls, ceilings or floors shall be made good.

1.5 The system shall be designed such that no more than 80% of the available signaling / detection loop capacity is employed to allow for future requirements.

1.6 Proprietary items or materials, where specified, are to be of the brand specified. Alternative offerings are to be approved by the Engineer prior to Tender Closing.

2. Normative References

Standard	Description
SANS10139:2021 (Edition 4.00)	Fire detection and alarm systems for buildings -
SANS 14520-1:2019 (Edition 4.00)	Gaseous fire-extinguishing Part 1: General requirements
EN54-1:2011	Introduction
EN54-2:1997 +A1:2006	Control and Indicating Equipment
EN54-3:2001 +A1:2002 +A2:2006	Audible Alarm Devices
EN54-4:1997 +A1:2002 +A2:2006	Power Supply Equipment
EN54-5:2000 +A1:2002	Heat Detectors – Point Detectors
EN54-7:2000 +A1:2002 +A2:2006	Smoke Detectors – Point Detectors
EN54-11:2001 +A1:2005	Manual Call Points
EN54-13:2005	Compatibility Assessment of System Components
EN54-17:2005	Short Circuit Isolators
EN54-18:2005	Input / Output Devices
EN54-23:2010	Visual Alarm Devices
EN54-25:2008	Components using Radio Links

3. Standards

3.1 The fire detection system shall be designed, installed and commissioned in accordance with, and all elements shall meet the requirements of SANS 10139: Fire detection and alarm systems for buildings - System design, installation and servicing, 2021 Edition 4.00. The responsible company should be able to demonstrate their competence to design, install and commission the system to the relevant standard.

3.2 The equipment manufacturer shall operate a quality management system in accordance with ISO 9001:2000. In addition, the equipment shall be manufactured under a recognised factory control procedure such as the Vertrauen durch Sicherteit (VdS) scheme.

3.3 All detection devices shall be LPCB certified as complying with the relevant EN54 standard.

3.4 The Fire Alarm Control Panel shall be independently certified as complying with requirements of EN54 Part 2, EN54 Part 4 and EN54 Part 13. The Independent approvals body shall be the British Standards Institute (BSI) and Vertrauen durch Sicherteit (VdS).

3.5 The Fire Alarm Control Panel shall hold the BSI (British Standards Institute) Kitemark License.

3.6 In addition to the basic requirements of EN54, the Fire Alarm Control Panel shall offer the following EN54 optional features with requirements:

Optional Functions		EN54-2 Clause
Indication	Fault signals from points	8.3
Outputs	To fire alarm devices	7.8
Outputs	To fire alarm routing equipment	7.9
Outputs	To fire alarm protection equipment	7.10
Controls	Investigation delays to outputs	7.11
Co-incidence detection		7.12
Disablement of points		9.5
Test condition		10
Standardised I/O		11

Power Supply Equipment Functions	EN54-4 Clause
Operation from a main power supply	5.1
Operation from a standby battery	5.2
Monitor and charge the standby battery	5.3
Recognise and notify supply faults	5.4

3.7 The Fire Alarm Control Panel shall also support a number of additional functions that are not covered by EN54. These additional functions shall include:

Programmable Cause / Effect on Outputs (E.g. Phased Evacuation)
Auxiliary Power Supply Output
Auxiliary Relay Outputs
Programmable Push Buttons
More Alarms Button
Printer Option
USB and RS232 port

4. Fire Alarm Control Panel (FACP)

4.1. Functional Description

4.1.1. The FACP shall be the central controller of the complete system. It shall receive and process analogue information from the detection devices, provide audible and visual indication of alarm and other conditions to the user, automatically initiate alarm response sequences and provide the user interface for interrogation and user programming of the system.

4.1.2. Updates to the FACP operating software shall be simple to undertake and shall not require the use of replaceable components. The operating program and configuration memory shall be stored in non-volatile memory and shall not rely on batteries for retention. The FACP shall incorporate separate microprocessors for signaling loop control and central operation.

4.1.3. The FACP shall provide a user interface from which; controls can be operated, manual operations can be carried out, indications are audible and/or visible and system information can be obtained. It shall also be capable of unambiguously indicating the following functional conditions: Quiescent condition, fire alarm condition, fault warning condition and disablement condition. Furthermore, the fire alarm condition shall always be capable of clearly being indicated without any prior manual intervention at the FACP.

4.1.4. It shall be easy to configure all basic operating characteristics and variables through the user interface on the FACP to satisfy the detection zone and output mapping of the premises. A PC Tool operating under the Windows ™ operating system shall also be available to fully program the panel.

4.1.5. The FACP shall support up to 126/127 devices on the signaling loop. The FACP shall fully support the sub-addressing capabilities of the relevant input and output devices.

4.1.6. The FACP shall contain one, one to two, or one to four signaling loop drivers depending on the system design requirements. Each signaling loop shall be capable of supplying at least 500 mA of power for loop-based sounders or other output devices. The Fire Alarm Control Panel software and hardware loop driver, without modification, shall be compatible with the analogue detection, call points, input and output devices.

4.1.7. The FACP shall fully support the sub-addressing capabilities of loop devices incorporating this feature and any radio-based devices within each protocol.

4.1.8. The FACP must provide system integrity and is to be approved to EN54 Part 13 thus ensuring: -

- Enhanced monitoring of ALL circuits including sounder circuits and loop circuits.
- The FACP can detect a fault which may not be visible until an alarm condition.
- The FACP can be selected / programmed for specific current consumption for individual circuits.

4.1.9. The FACP shall provide 2 or 4 outputs to fire alarm devices, each rated at 1-ampere. An auxiliary supply output shall also be available to provide power for internal option modules.

4.1.10. The FACP shall provide a diagnostic monitoring feature for all signaling loop, alarm device output and auxiliary supply output circuits to monitor voltage, current load, etc. This information shall be documented and available to view at Level 2. In addition, diagnostic monitoring of the signaling loop return current pulses shall be provided at Level 3.

4.1.11. The FACP shall provide an internal “Scope” for all signaling loop devices. This information shall be captured and available to view at Level 3 menu only.

4.1.12. The FACP shall incorporate a real-time clock for time stamping of events in the event history log and for scheduling of time related functions.

4.1.13. It shall be possible to install a network communications card to allow connection of up to 200 control panels, remote terminals, mimic displays or other peripheral devices. The network shall offer peer-to-peer operation and have a fault tolerant capability. The time to propagate a fire alarm condition across the network shall not exceed 3 seconds.

4.1.14. A single FACP shall have the capability for configuration and operation of 200 fire alarm zones. In a network system, the overall system shall have the capability for up to 2000 zones.

4.1.15. It shall be possible to adjust sensitivity settings for all detection devices based on a time clock. It shall be possible to select device modes for both active and inactive time periods for multi-sensor detectors.

4.1.16. It shall be possible to configure the panel for Stage 1/ Stage 2 Investigation operation based on a time clock. It shall be possible to configure the devices used for investigation on an individual basis. This shall also include call point type devices.

4.1.17. It shall be possible to configure up to 10 independent time clocks. Each time clock shall be capable of up to two active time periods for each day of the week.

4.1.18. All fault conditions (except CPU System Fault) shall be non-latching.

4.1.19. All input devices shall have the capability of being latching or non-latching (except when configured for Fire Alarm input).

4.1.20. It shall be possible to configure complex cause and effect operation for phased evacuation and output control operations at the panel. It shall be possible to assign each output device to one of 200 output groups, each output group operation being programmable as to response on a zone by zone basis for fire, double-knock fire, pre-alarm, fault, enablement or disablement conditions and shall provide up to 40 programmable ringing styles with programmable delays, pulsing tones and pre-programmed tones.

4.1.21. It shall be possible to connect optional equipment in accordance with the requirements of EN54-2 Standardised I/O such as mimic panels and remote control terminals.

4.2. Panel Construction

4.2.1. The Fire Alarm Control Panel shall be of metal construction. It shall be capable of surface or semi-flush mounting. Wiring terminations are to be situated towards the top of the unit. Sufficient 20 mm knockouts shall be provided to accommodate all likely wiring requirements.

4.2.2. The housing shall meet IP30 minimum ingress protection classification (due to being housed inside buildings) finished in colour RAL 7035. It shall not be possible to open the enclosure without a key or special tool.

4.2.3. The FACP should have variants of small, medium, large and deep enclosures with the facility to also provide rack mounted options.

4.3. Panel Indications

4.3.1. The Fire Alarm Control Panel shall be equipped with a white backlit display (240x64 pixels) as the primary indicator giving at least 6-lines of information. The display shall illuminate upon any event (excluding mains failure) or button press. The display must provide an energy efficient software adjustment and be able to be dimmed and provide the option of giving the facility of ‘More Alarms’.

4.3.2. The primary display shall be simultaneously capable of indicating the presence of Fire Alarms, Faults, Disablements and Tests in accordance with the requirements of EN54-2.

4.3.3. In addition, the following minimum LED indicators shall be provided in accordance with the requirements of EN54-2:

Power On	Green
Fire Alarm	Red
Fault	Yellow
Disabled	Yellow
Test	Yellow
Fire Routing Activated	Yellow
Fire Routing Fault	Yellow
Fire Routing Disabled	Yellow
Pre-Alarm	Yellow
Fire Protection Activated	Yellow
Sounders Silenced	Yellow
Sounders Disabled	Yellow
Sounder Fault	Yellow
System Fault	Yellow
Delayed	Yellow

4.3.4. In addition, there shall be five programmable LED Indicators for application use and four programmable pushbuttons with associated LEDs. Up to 8 operable key switches shall be able to be added with ease with the addition of being able to provide text description once the FACP has left the factory. A monitored fault input should be included without the need of adding additional boards.

4.3.5. The FACP must have as standard 20 on-board zone LEDs with the ability of being able to add further LEDs in groups of 50, 100 or 200. LEDs shall be extendable offering both red (fire) and yellow (fault or disablement) options that can be programmed via a PC tool. A dedicated 50 zone LED option shall also be available with slide-in labels for descriptive purposes. The zone feature shall also be able to be provided on a graphical mimic basis if required.

4.4. Panel Controls

4.4.1. The Fire Alarm Control Panel shall be provided with the following minimum manual controls:

Mute
Evacuate (Sound Alarms)
Silence
Resound Alarms
Reset
LED Test
More Alarms
Programmable Pushbuttons (x4)

4.4.2. In addition, the following controls shall be provided for menu operation and programming:

Navigation keys, ➔ ← ↑ ↓
A confirmation key, ✔
A numeric keypad, 0-9, also providing the function for letter / character programming
A cancel key
A menu select key

4.5. Networking

4.5.1. The Fire Alarm Control Panel shall be capable of networking up to 32 nodes on a standard network (Fig.1) and up to 200 nodes on a secure network (Fig. 2).

Fig. 1

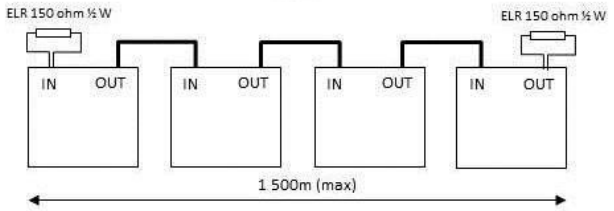

Fig. 2

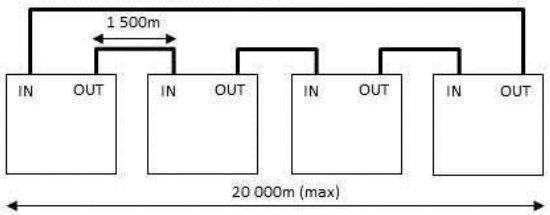

4.5.2. A zoning facility to allow the networked system to share up to 2000 zones giving non-confusing indication and allowing true peer-to-peer cross panel report, control and site-wide cause and effect functionality.

4.5.3. Simply adding and connecting a network card will allow any node/control panel or remote terminal to be networked. All other nodes on the system will be instantly aware of a panel as soon as it is given a valid network node address, allowing additional panels to be added at any time with a minimum amount of reprogramming.

4.5.4. A facility to prevent the transmission of fires and faults during commissioning of the network system shall also be available.

4.5.5. For more complex systems, Windows based PC configuration software (as described later) allows sector-based programming for Mute, Silence, Resound and Reset control keys as well as investigation delays, group disablement and test instructions. All panels within the same sector will share common controls and each panel or remote terminal can also be programmed to show specific network information on a zonal basis.

4.5.6. For cause and effect any input device can be programmed to operate any output device on any panel and to simplify the programming, all the configuration data is contained within one user-friendly network configuration file.

4.6. Software

4.6.1. A PC Configuration Tool shall be available for configuration of the FACP and for retention of configuration data. The PC Configuration Tool shall be graphically based and operate under Windows ™ operating systems Windows 10.

4.6.2. The software features shall include: -

- Configuration Tool
  - Permanent/timed disablements
  - Re-sound buzzer daily
  - Timeout from Level 2 to Level 1
  - 5000 memory event log
  - Investigations delays
  - Disable/enable logging
  - Disable by Purpose
  - Disable across the network
  - Sector programming
  - 1500 allowable logic lines
  - Virtual Terminal
- Logo Tool
  - Bitmap format for customer/end-user branding
- Service Tool
  - Download device information
  - View drift status of detectors
  - Provide a device history of every device (last activated, tested, disables, when created)
  - Extract event log information
  - Be able to group data
  - Provide user defined reports

4.7. Configuration

It shall be possible to configure ALL basic configuration parameters and settings from either the FACP front panel or from the PC Configuration Tool. Both USB and serial connections from the FACP to the PC are to be available. It shall be permitted to configure enhanced / extended features and functions from the PC Configuration Tool only.

4.8. Remote Dial-up

Software shall also be available to provide full dial-up capability to the FACP using a modem. This software package should enable remote access to interrogate and inspect the operation of the FACP, retrieve panel status and historic event log.

4.9. Remote Access

4.9.1. It shall be possible to remotely access the Fire Alarm System via an internet-based program. This facility should: -

- Be configurable over the internet
- Be password protected
- Provide event notification via e-mail
- Require no propriety software
- Be able to gather real time information from the fire network
- Be able to enable/disable devices/zones, rest the network, silence the network, mute the network and re-sound the sounders on the network.

4.10. Remote Terminals

4.10.1. It shall be possible to provide remote access to monitor (Remote Display Terminal) or monitor / control (Remote Control Terminal) operation of the installation.

4.10.2. The Remote Control Terminal shall provide the same display, indication and buttons as the FACP.

4.10.3. The Remote Display Terminal shall provide the same display, indication and buttons as the FACP except for the control buttons.

4.10.4. Remote Control Terminals shall provide the capability to silence alarms, re-sound alarms, evacuate and reset the system. In addition, it shall be possible to remotely enable or disable zones and points and remotely configure a zone walk test.

4.10.5. It shall also be possible to include any programmable pushbuttons that may be operable on the FACP.

4.11. Power Supplies

4.11.1. All power supplies (integral to the fire alarm control panel or remote) shall be certified to EN54-4 and shall be capable of supporting 6–hour standby requirements. The FACP shall have a built-in or remote battery temperature sensor.

4.11.2. All power supplies shall be capable of operating from a main supply of 200 – 240 V a.c. 50/60 Hz.

4.12. Additional System Components

4.12.1. The following additional system components/modules shall be available as optional equipment.

Remote Control Terminals:	Providing the features and functions described in EN54-2 clause 11.
Remote Display Terminals:	Providing the features and functions described in EN54-2 clause 11.
Mimic Module:	Providing a bespoke solution for graphical presentation, using LED Indicators, to indicate either zone-based fires or output groups activated.
Graphics Interface Module:	Providing a gateway to 3rd party graphics packages with full reporting and control features and functions. It shall be possible to install multiple graphics gateways in the network and have the facility to have IP based workstations.
Printer:	Providing the capability to select and automatically print fire, alarm, fault and test events and the capability to manually print the historic log. The printer arrangement shall be such that it is not required to open the enclosure

	to change the paper roll. The printer shall not use replaceable ink ribbons or cartridges.
Integral Modem:	Providing remote connection to the FACP.
General Routing Interface:	Providing routing outputs in compliance with EN54-2 clauses 7.9, 7.10 and 8.9.
ESPA Interface:	Providing a gateway to 3rd party graphics packages with full reporting and control features and functions. It shall be possible to install multiple graphics gateways in the network and have the facility to have IP based workstations.

4.12.2. It shall be possible to connect up to a maximum of 16 of the following modules (in any combination) via the FACPs internal peripheral (P) bus for locally based input and output extensions:

Zone Monitoring:	Providing 8 conventional zone inputs.
Programmable Sounders:	Providing 4 additional programmable sounder outputs. The outputs shall be fully synchronised.
Programmable Relays:	Providing 4 additional programmable outputs. The outputs shall be fully synchronised.
Programmable Inputs:	Providing 10 programmable monitored/non-monitored inputs.
Programmable Pushbuttons:	Providing 16 programmable pushbuttons (switches) with 3 integrated LEDs per switch (red, yellow, green).
Mimic Driver Card:	Providing 16 programmable inputs and 48 programmable LED driver outputs.

4.13. Maintenance

4.13.1. The following maintenance features are to be included within each FACP: -

- A built-in scope function for each loop
- Provide history of each device
- Be able to view software versions of all PCBs on the control panel
- Provide cross network viewing of each panel's status
- View battery charger voltages and temperature
- Provide drift and warning states for the devices

5. Detectors and Devices

The system shall be compatible with, and fully capable of using all of the features of the following detection, alarm indicating and other devices:

5.1. Loop Specification

5.1.1. The "loop" shall be a two-wire circuit starting at and returning to the same set of terminals at the control panel.

5.1.2. The loop shall be capable of driving up to 126 field addressable devices over a total loop distance of up to 2 kilometres.

5.1.3. All analogue addressable devices shall have a unique address. Each device may be polled as often as is required up to a maximum of 69 times per second, depending on the amount of information required for each device.

5.1.4. There shall be no pre-set order for polling the devices. The devices shall be polled in an order appropriate to the FACP.

5.1.5. Isolators shall be fitted at a maximum spacing of one per 20 devices. The isolators shall protect against short circuits on the loop by isolating that section of the loop where the short circuit occurred, thus maintaining the integrity of the remainder of the system.

5.1.6. Fire condition LED indicators fitted to the devices and any remote indicators shall be remotely and separately operated from the control panel.

5.1.7. All fire condition LED indicators shall be reset from the control panel without removing power from the loop.

5.1.8. The communication to each device shall be achieved by means of a digital protocol superimposed on the d.c. supply.

5.1.9. The manual call points shall each have their own unique address and the panel shall be capable of identifying and responding to the operation of a call point in less than one second.

5.1.10. The address data for each device shall be stored in the base of any smoke or heat detector, but this shall be achieved purely by mechanical and not electronic means. These bases shall have this coding feature fitted as standard. One base terminal shall be provided for cable shield continuity. The terminals for the supply wires shall be in/out double terminals.

5.1.11. The loop shall be capable of receiving information in addition to that from heat and smoke detectors e.g., operation of sprinkler system. The source of this information shall be identified by its own unique address. Any interface equipment used to achieve this requirement shall be from the product range of the same manufacturer as the detectors or FACP manufacturer.

5.1.12. Only two loop wires shall be required to power the detectors, address and carry data to and from the field devices by digitally encoded signals superimposed on the supply voltage.

5.1.13. The FACP shall be able to identify what type of device is located at each address in order to protect against accidental fitting of an inappropriate device.

5.1.14. The FACP shall be able to identify the absence of an address of a field device.

5.2. Photoelectric (Optical) Smoke Detectors

5.2.1. The photoelectric (optical) smoke detectors shall be suitable for detecting visible smoke such as is produced by slow smouldering fires including burning PVC.

5.2.2. They shall be of the light scattering type using a pulsed internal LED light source and a photo-diode sensor.

5.2.3. The detectors shall be suitable for connecting to a 24 V central system and operate satisfactorily within the supply voltage range of 17 V–28 V d.c.

5.2.4. A clear indicator LED shall be provided on the detector which illuminates red when the detector has reached a pre-set alarm level. The indicator shall be operated independently of the detector from the FACP.

5.2.5. Provision shall be made for an output from the detector suitable for operating a remote indicator or other device with a current limitation of 4 milliamps. The output shall be operated independently of the smoke detector from the central control panel.

5.2.6. The detector shall be capable of operating within the following environmental limits:

Temperature operating range -20 ºC to +60 ºC no condensation
Humidity operating range 0 % to 95 % RH
Wind speeds—not affected

5.2.7. Separate mounting bases shall be required which enable ready removal of the detectors

for maintenance. The bases shall be fitted with dual finger stainless steel contacts.

5.2.8. The construction of the detector and bases shall be in white self-extinguishing polycarbonate plastic. All circuitry must be protected against moisture and fungus. Smoke entry points must be protected against dust and insect ingress by corrosion resistant gauze. The optical chamber must be of conductive plastic and have a snap-lock fit for ease of removal when cleaning. The detectors must be unobtrusive when installed, having a dimension not exceeding 50mm x 100mm diameter maximum including the mounting base.

5.2.9. The detector shall incorporate a feature enabling it to be locked securely to its base.

5.2.10. Data transmissions to and from the FACP from the detector shall be via communications circuitry which is factory fitted to the detector by the original detector manufacturer and forms a complete and integral part of the detector

5.2.11. The detector shall be supplied complete, fully tested and calibrated.

5.2.12. The unique address of the detector shall be set by the installer by means of a coded plastic card fitted to the detector base.

5.2.13. The detector shall be capable of being remotely tested from the control panel by the transmission of an output command bit to the addressed detector. This shall result in a healthy detector transmitting back an analogue value in excess of the recommended fire alarm threshold. The FACP will recognise this as a test signal and shall not raise an alarm against this signal.

5.3. Heat Detectors

5.3.1. The heat detector shall be electronic in operation and suitable for connecting to a 24 V central system which can operate within the voltage range of 17 V -28 V DC.

5.3.2. The device shall detect temperature by means of an NTC thermistor and shall operate when the set rate of change of temperature is reached.

5.3.3. A red indicator LED shall be provided on the detector which illuminates when the detector has reached a pre-set alarm level. The indicator shall be operated independently of the detector from the FACP.

5.3.4. Provision shall be made for an output from the detector suitable for operating a remote indicator or other device with a current limitation of 4 milliamps. The output shall be operated independently of the heat detector from the FACP.

5.3.5. The detector shall be capable of operating within the following environmental limits:

Temperature operating range –20 ºC to +60 ºC (no condensation)
Humidity operating range 0 % to 95% RH
Wind speeds—not affected

5.3.6. Separate mounting bases shall be required which enable ready removal of the detectors for maintenance. The bases shall be fitted with dual finger stainless steel contacts.

5.3.7. The construction of the detector and bases shall be in white self-extinguishing polycarbonate plastic. Full circuitry must be protected against moisture and fungus. The detectors must be unobtrusive when installed, having a dimension not exceeding 50 mm x 100 mm diameter maximum including the mounting base.

5.3.8. The detector shall incorporate a feature enabling it to be locked securely to its base.

5.3.9. Data transmissions to and from the control panel from the detector shall be via communications circuitry which is factory fitted to the detector by the original detector manufacturer and forms a complete and integral part of the detector.

5.3.10. The detector shall be supplied complete and fully tested and calibrated.

5.3.11. The unique address of the detector shall be set by the installer by means of a coded plastic card fitted to the detector base.

5.3.12. The detector shall be capable of being remotely tested from the FACP by the transmission of an output command bit to the addressed detector. This shall result in a healthy detector transmitting an analogue value in excess of the recommended fire alarm threshold. The control panel will recognise this as a test signal and shall not raise an alarm against this signal.

5.4. Additional Specifications for Multi-sensor Detectors

5.4.1. The following specifications are in addition to the common specifications of detectors and apply to multi-sensor detectors only.

5.4.2. Multi-sensor detectors shall be analogue addressable, suitable for detection of visible products of combustion (smoke) and have a fixed temperature threshold of class A2S.

5.4.3. Multi-sensor detectors shall otherwise have the characteristics described in section 3 of this specification.

5.4.4. The detector shall be capable of being remotely tested from the FACP by the transmission of an output command bit to the addressed detector. This shall result in a healthy detector transmitting an analogue value in excess of the recommended fire alarm threshold. The control panel will recognise this as a test signal and shall not raise an alarm against this signal.

5.5. Manual Call Points (Addressable)

5.5.1. The call point shall be manufactured from self-extinguishing red plastic.

5.5.2. The overall size of the call point shall not exceed 87 mm x 87 mm x 52 mm.

5.5.3. The call point shall be based upon a standard product manufactured by a reputable call point manufacturer. The manual call point shall then be modified by the manufacturer of the heat and smoke detectors to incorporate a communications module within the call point. No external alterations to the call point shall be made other than the fixing of a flush mounted LED to be located to the left of the word ‘Fire’ which shall appear in black letters across the top of the call point on the vertical face. The LED shall be red in colour.

5.5.4. The LED shall illuminate when the manual call point is activated. However, the illumination of the LED will be by command from the FACP.

5.6. Short-circuit Isolators

5.6.1. Short-circuit isolators shall be of the stand-alone type with a mounting base that is unique to the isolator or may be incorporated into the mounting base of a detector. Isolators may also be incorporated into interfaces.

5.6.2. In the event of a short-circuit fault on the loop wires the isolators shall be capable of sensing the short circuit and disconnecting the affected part of the loop within 50µs.

5.6.3. Isolators shall operate at between 17 V and 28 V d.c. in normal conditions. The isolators shall open and disconnect the affected part of the loop when the loop voltage falls to 14±0.4 V.

5.6.4. The isolators on either side of the short-circuit fault shall test the integrity of that part of the loop every 4–5 seconds. If the short-circuit fault is no longer present, the affected part of the loop shall be re-connected.

5.6.5. The isolators shall be supplied by the supplier of the detectors and interfaces. The mouldings of the isolators, the isolator bases and the isolating bases shall be of the same material as the detectors and bases.

5.6.6. The isolators shall be capable of operating in the following environments:

Temperature range –20 °C to +60 °C (no condensation or icing) Humidity
0 % to 95 % RH (no condensation)
Design environment indoor use only

5.7. Output Unit

5.7.1. The output unit shall provide a volt free changeover relay contact operated by command from the control and indicating equipment (FACP).

5.7.2. The contacts of the relay output unit shall be rated at a minimum of 1 A at 24 V d.c.

5.7.3. The output unit shall be capable of deriving its operating power from the addressable loop.

5.7.4. The output unit shall provide a red LED indication that the relay has operated.

5.8. Switch Monitor

5.8.1. The switch monitor shall provide status monitoring of one or more single pole, volt-free contacts connected on a single pair of cables, to the FACP.

5.8.2. The switch monitor shall provide the facility to monitor the input wiring for open and short circuits and transmit the necessary fault signal to the FACP.

5.8.3. The switch monitor will communicate four input states to the FACP—‘Normal’, ‘Fault’, ‘Pre-Alarm’ and ‘Alarm’.

5.8.4. The switch monitor shall provide a red LED indication for an ‘Alarm’ condition and a yellow LED for a ‘Fault’. The switch monitor shall be capable of deriving its power directly from the addressable loop.

5.8.5. A version with identical functionality but smaller dimensions shall be available for use where space is limited.

5.8.6. A version with additional functionality shall be available for use where a delay in response is required.

5.9. Addressable Mini Switch Monitor (Interrupt)

5.9.1. The mini switch monitor (interrupt) shall provide status monitoring of one or more single pole, volt-free contacts connected on a single pair of cables, to the FACP.

5.9.2. The mini switch monitor (interrupt) shall provide the facility to monitor the input wiring for open and short circuits and transmit the necessary fault signal to the FACP.

5.9.3. The mini switch monitor (interrupt) will communicate three input states to the FACP—‘Normal’, ‘Fault’ and ‘Alarm’.

5.9.4. The mini switch monitor (interrupt) shall provide a ‘priority interrupt’ where a fast response to the signal is required.

5.9.5. The mini switch monitor (interrupt) shall provide an integral red LED and provision for a remote LED which is switched automatically with the integral LED.

5.9.6. The mini switch monitor (interrupt) shall have small dimensions for use where space is limited.

5.10. Sounder Control Unit

5.10.1. The sounder control unit shall be capable of monitoring and driving a circuit of alarm sounders.

5.10.2. The output of the sounder control unit shall be rated at 1A.

5.10.3. The sounder control unit shall be capable of operating the sounders in a pulsing or continuous mode as determined by the FACP.

5.10.4. The sounder control unit shall provide the facility to monitor the wiring to the alarm devices for open or short-circuit and transmit the necessary fault signal to the FACP.

5.10.5. The sounder control unit shall provide the facility to monitor for failure of the local power supply and transmit the necessary fault signal to the FACP.

5.10.6. The sounder control unit shall provide a red LED indication that the sounder circuit has been actuated. It shall also provide a yellow LED indication for any detected faults.

5.10.7. The sounder control unit should be capable of being addressed into a group by means of a separate 4 bit DIL switch.

5.10.8. The sounder control unit should have the facility for synchronising the output for continuous and pulsed operation with other addressable alarm devices.

5.11. Input/Output Unit

5.11.1. The input/output unit shall provide a volt free changeover relay contact operated by command from the FACP.

5.11.2. The contacts of the input/output unit shall be rated at a minimum of 1 A at 24 V d.c.

5.11.3. The input/output unit shall be capable of deriving its operating power from the addressable loop.

5.11.4. The input/output unit shall provide a red LED indication that the relay has operated.

5.11.5. The input/output unit shall provide a yellow LED to indicate a ‘Fault’ condition; open and short circuit on the input wiring, and a red LED to indicate when the switch input is closed.

5.11.6. The input/output unit shall provide monitoring of the status of a single pole, volt free contact connected on a single pair of cables, to the FACP.

5.11.7. The input/output unit shall provide a further opto-coupled input for monitoring an external voltage.

5.11.8. The input/output unit will communicate three input states to the FACP: ‘Normal’, ‘Fault’ and ‘Switch Closed’.

5.12. Mains Switching Input/Output Unit

5.12.1. The mains switching input/output unit shall provide a single-pole voltage free relay contact operated by command from the FACP.

5.12.2. The relay contact of the mains switching input/ output unit shall be rated at a minimum of 5 A at 250 V a.c. and 2 A at 48 V d.c.

5.12.3. The mains switching input/output unit shall be capable of deriving its operating power from the addressable loop.

5.12.4. The mains switching input/output unit shall provide a red LED indication that the relay has operated.

5.12.5. The mains switching input/output unit shall provide a yellow LED to indicate a 'Fault' condition; open and short circuit on the input wiring, and a red LED to indicate when the switch input is closed.

5.12.6. The mains switching input/output unit shall provide status monitoring of one or more single pole, volt-free contacts connected on a single pair of cables, to the FACP.

5.12.7. The mains switching input/output unit will communicate three input states to the FACP: 'Normal', 'Fault' and 'Switch Closed'.

5.13. DIN Rail Interface Units

5.13.1. DIN rail Interfaces feature enclosures that clip to standard 35 mm DIN rails or are screwed to the base of a larger enclosure.

5.13.2. The following interface units shall be available in DIN rail format: -

- Input/output unit
- Output unit
- Switch monitor
- Switch monitor plus
- Zone monitor
- Mains switching Input/Output
- Sounder Circuit Controller

5.14. Intelligent Base Sounder

5.14.1. The addressable base sounder shall provide an output of 85 dB (A) at 1 metre and will have a low current consumption at this level.

5.14.2. The addressable base sounder shall have a DIL switch selectable option of changing the output to 92 dB (A) at 1 metre.

5.14.3. The addressable base sounder shall be supplied as a sounder base only, so that a detector can be fitted, or with a cover for use as a stand-alone sounder.

5.14.4. The addressable base sounder shall produce either a continuous alternating tone of 0.5 s 610 Hz, 0.5 s 510 Hz or a pulsed tone of 1 s 510 Hz, 1 s off, on command from the FACP.

5.14.5. The addressable base sounder shall be capable of deriving its power directly from the addressable loop.

5.14.6. A version of the addressable base sounder shall be available with identical functionality but without a terminal block for points where an isolating base is to be used.

5.15. Addressable Open Area Sounder

5.15.1. The addressable open area sounder shall provide an output of 100 dB (A) at 1 metre and have a low current consumption at this level.

5.15.2. The addressable open area sounder shall produce either a continuous alternating

tone or a pulsed tone on command from the FACP.

5.15.3. The addressable open area sounder shall have a DIL switch selectable option of changing the volume output to 92 dB (A) at 1 metre.

5.15.4. The addressable open area sounder shall be capable of deriving its power directly from the addressable loop.

5.15.5. The addressable open area sounder shall have the facility to be synchronised in continuous and pulsed operation with other addressable alarm devices.

5.15.6. The addressable open area sounder shall have the facility to be addressed as part of a group by using a separate 4-bit DIL switch.

5.15.7. A weatherproof version rated to IP65 shall also be available.

5.16. Intelligent Base Beacon

5.16.1. The beacon base is a loop-powered beacon combined with a standard detector mounting base. A version with built-in isolator shall also be available.

5.16.2. The addressable beacon base shall be supplied as a beacon base only, so that a detector can be fitted, or with a cover for use as a stand-alone unit.

5.16.3. The beacon base shall offer the following: -

- Beacon flash rate of once per second
- Synchronisation of beacon flash
- Individual and group addressing
- Beacon self-test

5.17. Loop-Powered Beacon

5.17.1. The loop-powered beacon is a local area beacon designed for indoor use and requires a standard detector base or alternatively can be mounted on the intelligent base sounder.

5.17.2. The loop-powered beacon shall offer the following: -

- Beacon flash rate of once per second
- The use of LEDs for low power consumption
- Automatic LED check when beacon is activated
- Fault signal if LED check failed
- Lockable onto base
- Synchronisation with other sounders

5.18. Intelligent Sounder/Beacon Base

5.18.1. The loop-powered sounder beacon base combines a sounder with a beacon and a detector base in one unit. A version with built-in isolator shall also be available.

5.18.2. The loop-powered sounder beacon base shall be supplied as a sounder beacon base only, so that a detector can be fitted, or with a cover for use as a stand-alone unit.

5.18.3. The loop-powered sounder beacon base shall offer the following: -

- Beacon flash rate of once per second
- Synchronisation of beacon flash and sounder
- Individual and group addressing
- Beacon self-test
- A high and low volume setting controlled via DIL switch

5.19. Addressable Sounder/Beacon

5.19.1. The addressable sounder beacon is designed for operation in an open area and is loop powered.

5.19.2. The addressable sounder beacon shall offer the following: -

- Two volume settings 92 dB (A) and 100 dB (A)
- Individual and group addressing (via DIL switch)
- Synchronisation or 'alert' and 'evacuate' tones
- Available with or without built-in isolator
- Weatherproof version available
- Three tones standard

5.20. Gas Control Unit (GCU)

5.20.1. This unit shall control the automatic release of the FM200 gas (fire extinguishant).

5.20.2. Two separate fire alarms signals are required to initiate the release sequence. The automatic release may be switched to manual release mode via a key switch on the panel. A manual release mechanism shall be housed on the panel facia.

5.20.3. Visual alarm, audible alarm and gas discharge outputs shall be monitored for short and open circuit fault. The two fire alarm inputs shall also be monitored. These circuits shall be provided with lightning protection. The first fire signal received shall activate a 24 V d.c. bell contact, the second fire signal shall activate the two initiate outputs and after a 30 or 60 second delay, the discharge output.

5.20.4. Panel housing shall have transparent window to view panel, be of at least IP54 for coastal conditions.

6. Supervisory Control and Data Acquisition (SCADA) System

6.1. Functional Description

6.1.1. The system shall be compatible with any FACP, and fully capable of using all of the features of the detection, alarm indicating and other devices.

6.1.2. The Structured Query Language (SQL) database shall be opensource, reliable and robust.

6.1.3. The system shall handle all known Alarm Receiver formats and have built in TCP/IP capability and can therefore communicate across LANS, WANS, or the Internet.

6.1.4. The SCADA system shall incorporate multiple independent monitoring codes,

each with the facility to link to different decoding categories.

6.1.5. Zone descriptions shall be maintained independently of the equipment in use on the premises.

6.1.6. The system shall facilitate the monitoring of multiple reporting devise for each client with a periodic test function which caters for independent NO TEST report tracking on each device. The times scales for periodic test shall range from 5 minutes to 99 days.

6.2. Weblink SMS Module

6.2.1. This module is required to send messages to clients about signals or events from the FACP.

6.2.2. This module shall offer bulk SMS delivery, for which the client purchases SMS credits that can be used as and when required.

6.2.3. The service shall be instantaneous, and the client is notified well in advance when their SMS credits are running low.

6.2.4. Key functions include

- Sends automatic SMS to listed Key Holders on activation of selected events.
- Customizable message content per client per event.
- Sends SMS to a single or group of Key Holders.
- Sends a manual SMS to Cellular handsets.
- Sends Bulk SMS's to selected clients with filtering functions.
- Sets up recurring "diary" SMS alerts.
- Relay events to SCADA system by SMS.
- Alarm on Test to Technician SMS interface.
- Custom SMS interface options.

6.3. Back-up System

6.3.1. A real-time data synchronization module shall keep primary system and back-up system fully sync with each other.

6.4. Remote access, Maintenance and Support (RMS) service

6.4.1. There shall be 24/7 support available and annual software licence renewal.

6.4.2. Remote access and remote control computer software with the client's permission to access the server or Personal Computer (PC) to identity and if necessary, fix a problem, or assist.

6.5. Personal Computer (PC) Specifications

6.5.1. Genuine motherboards to be used with sufficient Peripheral Component

Interconnect (PCI) or Peripheral Component Interconnect Express (PCI-e) slots to accommodate additional serial cards (RS232 ports for base, receiver or modem connections)

6.5.2. A minimum of an i5 Central Processing Unit (CPU) is recommended.

6.5.3. A minimum of 256 Gb Solid State Drive (SSD). A secondary hard drive is recommended for backup purposes.

6.5.4. RS232 ports to be installed into the PC. Each base station or receiver requires its own RS232 port. Do not use USB to RS232 converters to link input units.

6.5.5. A minimum of 8 Gb Random-Access Memory (RAM).

6.5.6. The operating system shall be Windows 10 Pro.

6.5.7. The file server PC shall have a minimum of an i7 or Xeon CPU with 12 Gb RAM and operating system Windows 10 Pro, Windows Server 2012/2016.

6.5.8. The workstations linked to the server shall have a minimum i3 CPU with 4 Gb RAM and operating system Windows 10 Pro.

6.5.9. The minimum version of Internet Explorer shall be 11.

6.5.10. A good internet connection is required for support access, IP receivers and RMS service.

APPENDIX B - DRAWING REGISTER

Project Name:	KING SHAKA INTERNATIONAL AIRPORT REPLACEMENT OF FIRE DETECTION SYSTEM	
Document Number:	1152-FADS AND FGSS-REG-01-01	
Project Number:	1152	
Date:	2020/06/10	

No	Drawing / Document Number	Drawing / Document Description	Rev No	Date	Sheet	Purpose of Issue	Copies	Issued To	Rev No	Date	Sheet	Purpose of Issue	Copies	Issued To	Rev No	Date	Sheet	Purpose of Issue	Copies	Issued To
Drawing Register																				
1	1152_1000_LYT_01-01	FADS SLD	A	20-May-20	A1	D	EC	PT												
2	1152_1001_LYT_01-01	Typical Block Diagram	A	20-May-20	A1	D	EC	PT												
3	1152_1002_LYT_01-01	FADS BD TOC	A	20-May-20	A1	D	EC	PT												
4	1152_1003_LYT_01-01	FADS BD Terminal Building	A	20-May-20	A1	D	EC	PT												
5	1152_1004_LYT_01-01	Fire Suppression System Gas Pipe Layout	A	20-May-20	A1	D	EC	PT												
6	1152_1005_LYT_01-01	FGSS Modular Gas System	A	20-May-20	A1	D	EC	PT												
7	1152_1006_LYT_01-01	FADS BD Control Centre Fire and Rescue	A	20-May-20	A1	D	EC	PT												
8	1152_1007_LYT_01-01	FADS BD Maintenance Buildings	A	20-May-20	A1	D	EC	PT												
9	1152_1008_LYT_01-01	FGSS GCU with Door Contact	A	20-May-20	A1	D	EC	PT												
10	1152_1009_LYT_01-01	SD in Control Tower Shaft	A	20-May-20	A1	D	EC	PT												
11	1152_1010_LYT_01-01	SD and MGC in Control Tower Trench	A	20-May-20	A1	D	EC	PT												
12	1152_1011_LYT_01-01	Typical SD installation in ceiling	A	20-May-20	A1	D	EC	PT												
13	1152_1012_LYT_01-01	Typical MCP Installation without Door	A	20-May-20	A1	D	EC	PT												
14	1152_1013_LYT_01-01	Typical MCP and Sounder Installation without Door	A	20-May-20	A1	D	EC	PT												
15	1152_1014_LYT_01-01	Typical MCP Installation with Door	A	20-May-20	A1	D	EC	PT												
16	1152_1015_LYT_01-01	Typical MCP and Sounder Installation with Door	A	20-May-20	A1	D	EC	PT												
17	1152_1016_LYT_01-01	Typical Fire Panel Conduit Installation Recessed	A	20-May-20	A1	D	EC	PT												
18	1152_1017_LYT_01-01	Typical Fire Panel Conduit Installation Surface Mounted	A	20-May-20	A1	D	EC	PT												
19	1152_1018_LYT_01-01	Typical Fire Panel Cable Tray Installation	A	20-May-20	A1	D	EC	PT												
20	1152_1019_LYT_01-01	Typical MCP and Sounder Installation Control Tower	A	20-May-20	A1	D	EC	PT												
21	1152_1020_LYT_01-01	FGSS CTO - Gatehouse and Substation	A	20-May-20	A1	D	EC	PT												
22	1152_1021_LYT_01-01	FADS andFGSS S11 - Tradezone Substation	A	20-May-20	A1	D	EC	PT												
23	1152_1022_LYT_01-01	FADS AND FGSS AS1 - Airfield Substation 1	A	20-May-20	A1	D	EC	PT												

24	1152_1023_LYT_01-01	FGSS Terminal Building Airside Corridor - Arrivals Plant Room	A	20-May-20	A1	D	EC	PT												
25	1152_1024_LYT_01-01	FGSS Terminal Building - Basement	A	20-May-20	A1	D	EC	PT												

Project Name:	KING SHAKA INTERNATIONAL AIRPORT REPLACEMENT OF FIRE DETECTION SYSTEM
Document Number:	1152-FADS AND FGSS-REG-01-01
Project Number:	1152
Date:	2020/06/10

No	Drawing / Document Number	Drawing / Document Description	Rev No	Date	Sheet	Purpose of Issue	Copies	Issued To	Rev No	Date	Sheet	Purpose of Issue	Copies	Issued To	Rev No	Date	Sheet	Purpose of Issue	Copies	Issued To
Drawing Register																				
26	1152_1025_LYT_01-01	FGSS Terminal Building - Basement Core Room 1	A	20-May-20	A1	D	EC	PT												
27	1152_1026_LYT_01-01	FGSS Terminal Building - Basement Core Room 2	A	20-May-20	A1	D	EC	PT												
28	1152_1027_LYT_01-01	FADS & FGSS Control Tower Building -Tower Cab Level	A	20-May-20	A1	D	EC	PT												
29	1152_1028_LYT_01-01	FADS & FGSS Control Tower Building - Equipment Level	A	20-May-20	A1	D	EC	PT												
30	1152_1029_LYT_01-01	FADS & FGSS Control Tower Building - Equipment Level	A	20-May-20	A1	D	EC	PT												
31	1152_1030_LYT_01-01	FADS & FGSS Control Tower Building - Equipment Level	A	20-May-20	A1	D	EC	PT												
32	1152_1031_LYT_01-01	FADS & FGSS Floor Void - Control Tower Offices	A	20-May-20	A1	D	EC	PT												
33	1152_1032_LYT_01-01	FADS & FGSS AS2 - Airfield Substation No. 2	A	20-May-20	A1	D	EC	PT												
34	1152_1033_LYT_01-01	FADS & FGSS AS3 - Airfield Substation No. 3	A	20-May-20	A1	D	EC	PT												
35	1152_1034_LYT_01-01	FADS & FGSS - Airfield Substation AS4	A	20-May-20	A1	D	EC	PT												
36	1152_1035_LYT_01-01	FADS Gas Suppression Terminal Building - Arrivals Level	A	20-May-20	A1	D	EC	PT												
37	1152_1036_LYT_01-01	FADS & FGSS Terminal Building - Airline Offices	A	20-May-20	A1	D	EC	PT												
38	1152_1037_LYT_01-01	FADS Apron Ground Services Building 1	A	20-May-20	A1	D	EC	PT												
39	1152_1038_LYT_01-01	FADS Apron Ground Services Building 2	A	20-May-20	A1	D	EC	PT												
40	1152_1039_LYT_01-01	FADS Apron Ground Services Building 3	A	20-May-20	A1	D	EC	PT												
41	1152_1040_LYT_01-01	FADS Fire & Rescue Building - Ground Floor	A	20-May-20	A1	D	EC	PT												
42	1152_1041_LYT_01-01	FADS Crash, Fire & Rescue Ceiling Void & HD - Ground Floor	A	20-May-20	A1	D	EC	PT												
43	1152_1042_LYT_01-01	FADS Crash Fire Rescue Station First And Second Floor	A	20-May-20	A1	D	EC	PT												
44	1152_1043_LYT_01-01	FADS Crash Fire Rescue Station First And Second Floor	A	20-May-20	A1	D	EC	PT												
45	1152_1044_LYT_01-01	FGSS C02 For Duct Shaft - Control Tower Building	A	20-May-20	A1	D	EC	PT												
46	1152_1045_LYT_01-01	FGSS Piping & Cylinder Layout for CO2 in Shaft Duct	A	20-May-20	A1	D	EC	PT												
47	1152_1046_LYT_01-01	Control Tower Building FADS & FGSS Tower Cab Level	A	20-May-20	A1	D	EC	PT												
48	1152_1047_LYT_01-01	FADS & FGSS Control Tower Building Equipment Level	A	20-May-20	A1	D	EC	PT												

49	1152_1048_LYT_01-01	FADS Control Tower Building - Controller Level	A	20-May-20	A1	D	EC	PT												
50	1152_1049_LYT_01-01	FADS Control Tower Building - Tower Cab Level	A	20-May-20	A1	D	EC	PT												

Project Name:	KING SHAKA INTERNATIONAL AIRPORT REPLACEMENT OF FIRE DETECTION SYSTEM	
Document Number:	1152-FADS AND FGSS-REG-01-01	
Project Number:	1152	
Date:	2020/06/10	

No	Drawing / Document Number	Drawing / Document Description	Rev No	Date	Sheet	Purpose of Issue	Copies	Issued To	Rev No	Date	Sheet	Purpose of Issue	Copies	Issued To	Rev No	Date	Sheet	Purpose of Issue	Copies	Issued To
Drawing Register																				
51	1152_1050_LYT_01-01	FADS & FGSS Control Tower Building - Equipment Level	A	20-May-20	A1	D	EC	PT												
52	1152_1051_LYT_01-01	Typical Installation of Conduit layout in Control Tower	A	20-May-20	A1	D	EC	PT												
53	1152_1052_LYT_01-01	FADS & FGSS Control Tower Building Equipment Level	A	20-May-20	A1	D	EC	PT												
54	1152_1053_LYT_01-01	FADS & FGSS Control Tower Offices	A	20-May-20	A1	D	EC	PT												
55	1152_1054_LYT_01-01	FADS & FGSS Control Tower Offices Gate House & Substation	A	20-May-20	A1	D	EC	PT												
56	1152_1055_LYT_01-01	FADS & FGSS Floor Void - Control Tower Offices	A	20-May-20	A1	D	EC	PT												
57	1152_1056_LYT_01-01	FADS Ceiling Void - Control Tower Offices	A	20-May-20	A1	D	EC	PT												
58	1152_1057_LYT_01-01	FADS Forward Fuel Depot	A	20-May-20	A1	D	EC	PT												
59	1152_1058_LYT_01-01	FADS Forward Fuel Depot - Admin Block Floor Plan	A	20-May-20	A1	D	EC	PT												
60	1152_1059_LYT_01-01	FADS Fuel Farm	A	20-May-20	A1	D	EC	PT												
61	1152_1060_LYT_01-01	FADS - Fuel Farm - Admin Block Floor Plan	A	20-May-20	A1	D	EC	PT												
62	1152_1061_LYT_01-01	FADS Maintenance Building 1	A	20-May-20	A1	D	EC	PT												
63	1152_1062_LYT_01-01	FADS MB3 Building - Attic Stock / Wash Bay	A	20-May-20	A1	D	EC	PT												
64	1152_1063_LYT_01-01	FADS Multi-Storey Offices - First Floor	A	20-May-20	A1	D	EC	PT												
65	1152_1064_LYT_01-01	FADS Multi-Storey Offices-Second Floor	A	20-May-20	A1	D	EC	PT												
66	1152_1065_LYT_01-01	FADS Multi-Storey Offices - Third Floor	A	20-May-20	A1	D	EC	PT												
67	1152_1066_LYT_01-01	FADS Multi-Storey Offices-Fourth Floor	A	20-May-20	A1	D	EC	PT												
68	1152_1067_LYT_01-01	FADS Multi-Storey Offices - Ground Floor	A	20-May-20	A1	D	EC	PT												
69	1152_1068_LYT_01-01	FADS - MSP - Basement Level	A	20-May-20	A1	D	EC	PT												
70	1152_1069_LYT_01-01	FADS - MSP - First Floor	A	20-May-20	A1	D	EC	PT												
71	1152_1070_LYT_01-01	FADS - MSP - Ground Floor	A	20-May-20	A1	D	EC	PT												
72	1152_1071_LYT_01-01	FADS&FGSS S11 - Trade Zone Substation	A	20-May-20	A1	D	EC	PT												
73	1152_1072_LYT_01-01	FADS & FGSS AS1 - Airfield Substation No. 1	A	20-May-20	A1	D	EC	PT												

74	1152_1073_LYT_01-01	FADS & FGSS AS3 - Airfield Substation No. 3	A	20-May-20	A1	D	EC	PT												
75	1152_1074_LYT_01-01	FADS & FGSS AS3 - Airfield Substation No. 3	A	20-May-20	A1	D	EC	PT												

Project Name:	KING SHAKA INTERNATIONAL AIRPORT REPLACEMENT OF FIRE DETECTION SYSTEM	
Document Number:	1152-FADS AND FGSS-REG-01-01	
Project Number:	1152	
Date:	2020/06/10	

No	Drawing / Document Number	Drawing / Document Description	Rev No	Date	Sheet	Purpose of Issue	Copies	Issued To	Rev No	Date	Sheet	Purpose of Issue	Copies	Issued To	Rev No	Date	Sheet	Purpose of Issue	Copies	Issued To
Drawing Register																				
76	1152_1075_LYT_01-01	FADS Airside Corridor - Arrivals - Zone A	A	20-May-20	A1	D	EC	PT												
77	1152_1076_LYT_01-01	FADS Airside Corridor - Arrivals - Zone A	A	20-May-20	A1	D	EC	PT												
78	1152_1077_LYT_01-01	FADS Airside Corridor - Arrivals - Zone C	A	20-May-20	A1	D	EC	PT												
79	1152_1078_LYT_01-01	FADS Airside Corridor - Arrivals - Zone C	A	20-May-20	A1	D	EC	PT												
80	1152_1079_LYT_01-01	FADS Airside Corridor - Arrivals - Zone D	A	20-May-20	A1	D	EC	PT												
81	1152_1080_LYT_01-01	FADS Airside Corridor - Arrivals - Zone D	A	20-May-20	A1	D	EC	PT												
82	1152_1081_LYT_01-01	FGSS Airside Corridor - Arrivals Level - Plant Room	A	20-May-20	A1	D	EC	PT												
83	1152_1082_LYT_01-01	FADS Airside Corridor - Arrivals Mezzanine - Zone A	A	20-May-20	A1	D	EC	PT												
84	1152_1083_LYT_01-01	FADS Airside Corridor - Arrivals Mezzanine - Zone B	A	20-May-20	A1	D	EC	PT												
85	1152_1084_LYT_01-01	FADS Airside Corridor - Arrivals Mezzanine - Zone B	A	20-May-20	A1	D	EC	PT												
86	1152_1085_LYT_01-01	FADS Airside Corridor - Arrivals Mezzanine - Zone C	A	20-May-20	A1	D	EC	PT												
87	1152_1086_LYT_01-01	FADS Airside Corridor - Arrivals Mezzanine - Zone C	A	20-May-20	A1	D	EC	PT												
88	1152_1087_LYT_01-01	FADS Airside Corridor - Arrivals Mezzanine - Zone D	A	20-May-20	A1	D	EC	PT												
89	1152_1088_LYT_01-01	FADS Airside Corridor - Arrivals Mezzanine - Zone D	A	20-May-20	A1	D	EC	PT												
90	1152_1089_LYT_01-01	FADS Airbridges - Arrivals Mezzanine - Charlie Apron	A	20-May-20	A1	D	EC	PT												
91	1152_1090_LYT_01-01	FADS Airside Corridor - Departures - Zone A	A	20-May-20	A1	D	EC	PT												
92	1152_1091_LYT_01-01	FADS Airside Corridor - Departures - Zone A	A	20-May-20	A1	D	EC	PT												
93	1152_1092_LYT_01-01	FADS Airside Corridor - Departures - Zone C	A	20-May-20	A1	D	EC	PT												
94	1152_1093_LYT_01-01	FADS Terminal Building - Arrivals - Zone A	A	20-May-20	A1	D	EC	PT												
95	1152_1094_LYT_01-01	FADS Terminal Building - Arrivals - Zone A	A	20-May-20	A1	D	EC	PT												
96	1152_1095_LYT_01-01	FADS Terminal Building - Arrivals - Zone B	A	20-May-20	A1	D	EC	PT												
97	1152_1096_LYT_01-01	FADS Terminal Building - Arrivals - Zone B	A	20-May-20	A1	D	EC	PT												
98	1152_1097_LYT_01-01	FADS Terminal Building - Arrivals - Zone C	A	20-May-20	A1	D	EC	PT												

99	1152_1098_LYT_01-01	FADS Terminal Building - Arrivals - Zone C	A	20-May-20	A1	D	EC	PT												
100	1152_1099_LYT_01-01	FADS Terminal Building - Arrivals - Zone D	A	20-May-20	A1	D	EC	PT												

Project Name:	KING SHAKA INTERNATIONAL AIRPORT REPLACEMENT OF FIRE DETECTION SYSTEM	
Document Number:	1152-FADS AND FGSS-REG-01-01	
Project Number:	1152	
Date:	2020/06/10	

No	Drawing / Document Number	Drawing / Document Description	Rev No	Date	Sheet	Purpose of Issue	Copies	Issued To	Rev No	Date	Sheet	Purpose of Issue	Copies	Issued To	Rev No	Date	Sheet	Purpose of Issue	Copies	Issued To
Drawing Register																				
101	1152_1100_LYT_01-01	FADS Terminal Building - Arrivals - Zone D	A	20-May-20	A1	D	EC	PT												
102	1152_1101_LYT_01-01	FADS Terminal Building - Arrivals - Zone E	A	20-May-20	A1	D	EC	PT												
103	1152_1102_LYT_01-01	FADS Terminal Building - Arrivals - Zone E	A	20-May-20	A1	D	EC	PT												
104	1152_1103_LYT_01-01	FADS Void Detectors - Arrivals - Zone A	A	20-May-20	A1	D	EC	PT												
105	1152_1104_LYT_01-01	FADS Void Detectors - Arrivals - Zone A	A	20-May-20	A1	D	EC	PT												
106	1152_1105_LYT_01-01	FADS Void Detectors - Arrivals - Zone B	A	20-May-20	A1	D	EC	PT												
107	1152_1106_LYT_01-01	FADS Void Detectors - Arrivals - Zone B	A	20-May-20	A1	D	EC	PT												
108	1152_1107_LYT_01-01	FADS Void Detectors - Arrivals - Zone C	A	20-May-20	A1	D	EC	PT												
109	1152_1108_LYT_01-01	FADS Void Detectors - Arrivals - Zone D	A	20-May-20	A1	D	EC	PT												
110	1152_1109_LYT_01-01	FADS Void Detectors - Arrivals - Zone D	A	20-May-20	A1	D	EC	PT												
111	1152_1110_LYT_01-01	FADS - Arrivals Mezzanine - Zone A	A	20-May-20	A1	D	EC	PT												
112	1152_1111_LYT_01-01	FADS Arrivals Mezzanine - Zone B	A	20-May-20	A1	D	EC	PT												
113	1152_1112_LYT_01-01	FADS Arrivals Mezzanine - Zone C	A	20-May-20	A1	D	EC	PT												
114	1152_1113_LYT_01-01	FADS Arrivals Mezzanine - Zone D	A	20-May-20	A1	D	EC	PT												
115	1152_1114_LYT_01-01	FADS Departures - Zone A	A	20-May-20	A1	D	EC	PT												
116	1152_1115_LYT_01-01	FADS Departures - Zone A	A	20-May-20	A1	D	EC	PT												
117	1152_1116_LYT_01-01	FADS Departures - Zone B	A	20-May-20	A1	D	EC	PT												
118	1152_1117_LYT_01-01	FADS Departures - Zone B	A	20-May-20	A1	D	EC	PT												
119	1152_1118_LYT_01-01	FADS Departures Level - Zone C	A	20-May-20	A1	D	EC	PT												
120	1152_1119_LYT_01-01	FADS Departures Level - Zone D	A	20-May-20	A1	D	EC	PT												
121	1152_1120_LYT_01-01	FADS Departures Level - Zone D	A	20-May-20	A1	D	EC	PT												
122	1152_1121_LYT_01-01	FADS Terminal Building - Airline Offices	A	20-May-20	A1	D	EC	PT												
123	152_1122_LYT_01-01	FADS - Ceiling Void Airline Offices - Zone C	A	20-May-20	A1	D	EC	PT												

124	1152_1123_LYT_01-01	FADS - Ceiling Void Airline Offices - Zone C	A	20-May-20	A1	D	EC	PT												
125	1152_1124_LYT_01-01	FADS - Ceiling Void Airline Offices - Zone D	A	20-May-20	A1	D	EC	PT												

Project Name:	KING SHAKA INTERNATIONAL AIRPORT REPLACEMENT OF FIRE DETECTION SYSTEM
Document Number:	1152-FADS AND FGSS-REG-01-01
Project Number:	1152
Date:	2020/06/10

No	Drawing / Document Number	Drawing / Document Description	Rev No	Date	Sheet	Purpose of Issue	Copies	Issued To	Rev No	Date	Sheet	Purpose of Issue	Copies	Issued To	Rev No	Date	Sheet	Purpose of Issue	Copies	Issued To
Drawing Register																				
126	1152_1125_LYT_01-01	FADS - Ceiling Void Airline Offices - Zone D	A	20-May-20	A1	D	EC	PT												
127	1152_1126_LYT_01-01	FADS Terminal Building - Plant Room	A	20-May-20	A1	D	EC	PT												
128	1152_1127_LYT_01-01	FADS Basement - Zone A	A	20-May-20	A1	D	EC	PT												
129	1152_1128_LYT_01-01	FADS Basement - Zone B	A	20-May-20	A1	D	EC	PT												
130	1152_1129_LYT_01-01	FADS Basement - Zone C	A	20-May-20	A1	D	EC	PT												
131	1152_1130_LYT_01-01	FADS Basement - Zone D	A	20-May-20	A1	D	EC	PT												
132	1152_1131_LYT_01-01	FADS - Ceiling Void Basement - Zone A	A	20-May-20	A1	D	EC	PT												
133	1152_1132_LYT_01-01	FADS - Ceiling Void Basement - Zone A	A	20-May-20	A1	D	EC	PT												
134	1152_1133_LYT_01-01	FADS - Ceiling Void Basement - Zone B	A	20-May-20	A1	D	EC	PT												
135	1152_1134_LYT_01-01	FADS - Ceiling Void Basement - Zone B	A	20-May-20	A1	D	EC	PT												
136	1152_1135_LYT_01-01	FADS - Ceiling Void Basement - Zone C	A	20-May-20	A1	D	EC	PT												
137	1152_1136_LYT_01-01	FADS - Ceiling Void Basement - Zone C	A	20-May-20	A1	D	EC	PT												
138	1152_1137_LYT_01-01	FADS - Ceiling Void Basement - Zone D	A	20-May-20	A1	D	EC	PT												
139	1152_1138_LYT_01-01	Typical Concrete Lift with Motor Room	A	20-May-20	A1	D	EC	PT												
140	1152_1139_LYT_01-01	Typical Glass Lifts Cable Infrastructure (Lift 16 & 17)	A	20-May-20	A1	D	EC	PT												
141	1152_1140_LYT_01-01	Typical Concrete Lifts (w/o Motor Room) (Lifts 10, 11, 23 & 24)	A	20-May-20	A1	D	EC	PT												
142	1152_1141_LYT_01-01	FADS Cooling Tower - Basement	A	20-May-20	A1	D	EC	PT												
143	1152_1142_LYT_01-01	FADS Cooling Tower - First Floor	A	20-May-20	A1	D	EC	PT												
144	1152_1143_LYT_01-01	FADS Cooling Tower - Ground Level	A	20-May-20	A1	D	EC	PT												
145	1152_1144_LYT_01-01	FADS Ceiling Void Cooling Tower - Ground Level	A	20-May-20	A1	D	EC	PT												
146	1152_1145_LYT_01-01	Typical Installation Drawing Of Fire Relay Module	A	20-May-20	A1	D	EC	PT												
147	1152_1146_LYT_01-01	Typical Installation Linear Beam Controller & Reflector	A	20-May-20	A1	D	EC	PT												
148	1152_1147_LYT_01-01	Typical Installation Linear Beam Controller & Reflector	A	20-May-20	A1	D	EC	PT												

149	1152_1148_LYT_01-01	Typical Installation - Smoke Detector on Main Ceiling	A	20-May-20	A1	D	EC	PT												
150	1152_1149_LYT_01-01	Typical Installation of Fire Curtain	A	20-May-20	A2	D	EC	PT												

	Project Name:	KING SHAKA INTERNATIONAL AIRPORT REPLACEMENT OF FIRE DETECTION SYSTEM
	Document Number:	1152-FADS AND FGSS-REG-01-01
	Project Number:	1152
	Date:	2020/06/10

No	Drawing / Document Number	Drawing / Document Description	Rev No	Date	Sheet	Purpose of Issue	Copies	Issued To	Rev No	Date	Sheet	Purpose of Issue	Copies
Drawing Register													
151	1152_1150_LYT_01-01	Typical Installation of Gas Cylinders for CO2	A	20-May-20	A1	D	EC	PT					
152	1152_1151_LYT_01-01	Typical Installation for Control Unit and Gas Repeater Unit	A	20-May-20	A1	D	EC	PT					
153	1152_1152_LYT_01-01	Typical Installation Gas Control Unit	A	20-May-20	A1	D	EC	PT					
154	1152_1153_LYT_01-01	Typical Installation Drawing of FGSS - Terminal Building	A	20-May-20	A1	D	EC	PT					
155													
156													
157													
158													
159													
160													
161													
162													

163													
164													
165													
166													
167													
168													
169													
170													
171													
172													

Key

A- Issued for Information
B-Issued for Approval
C-Council Submission
D- Detail Design Submission
T- Issued for Tender
F- Issued for Construction EC-Electronic

Key

PT - Professional Team
MC - Main Contractor
EC - Electrical Contractor
CL - Client

APPENDIX C - BILLS OF QUANTITIES

ITEM	DESCRIPTION	UNIT	QTY	SUPPLY	INSTALL	AMOUNT R
1	**PRELIMINARY AND GENERAL**					
	Note: All items shall be priced for whatever cost may be considered necessary for Preliminary and General items to carry out the Electrical Installation in full, as detailed in the drawings, Specifications and Schedules, which shall include, but shall not be limited, to the following: The following notes apply to the full BOQ The BOQ is fully re-measureable. Tenderers are to price this Schedule strictly in accordance with the Specifications and SANS 10139, as amended. Where a conflict arises between these two documents the Specifications shall take precedence. Where a conflict arises between this Schedule and the Specifications, the Specifications shall take precedence. Tenderers shall study the Drawings before pricing this Schedule and the Schedule shall be priced to provide the complete Works All budgetary allowances shall only be used at the discretion of the Engineer, should these allowances not be required at the discretion of the Engineer, the full amounts shall be omitted No excavated material, loose materials, equipment, tools etc. may be left on any airside area's unless a work team is present and using the material, equipment, tools etc. for the specific tasks the work team is undertaking while on airside. Material, equipment, tools etc. must be removed to the specified site camp should the work team leave the relevant work area Haulage of materials excavated or supplied between the specified work areas and the site camp will be deemed to befree-haul					
1.1	Site establishment - including but not limited to latrines, water, generators, fuel, ALL safety aspects, site office, clerks of works. Careful planning will be required from building contractor to ensure that all completion dates are achieved. Make allowance in your price to work after hours and weekends.	Sum	1			
1.2	Provision of scaffolding and or cherry picker/scissor lift over and above the main contractor's scaffolding. Allow scaffolding with a safety net and appropriate fall arrest systems to ensure the safety of personnel and the public	Sum	1			
1.3	Any additional builders work over and above main contractors, including make good after chasing, plaster to builders satisfaction.	Sum	1			
1.4	Any necessary calculations or drawings requested by the Engineer.	Sum	1			
1.5	Provision of Fire Certificate of Compliance, equipment specifications, operating manuals	Sum	1			

1.6	Training on System Operation & Maintenance to users	Sum	1			
1.7	Disposal of faulty and old devices and panels	Sum	1			
1,8	Allowance for ACSA Health and Safety Requirements	Sum	1			
1,9	Allowance for Client Liaison and Construction Program Management	Sum	1			
Total Carried Forward To Summary						R -

ITEM	DESCRIPTION	UNIT	QTY	SUPPLY	INSTALL	AMOUNT R
2	**PANEL 1 - CARGO TERMINAL (EXCLUDED)** Supply and install Class A Addressable fire detection system, equipment and cabling as per Fire Engineer specifications. This includes for safety files, 12 month warranty on equipment. Ceiling detectors to include for remote alarm indicators. To allow for integration with electronic services specialist regarding automatic release for all doors and tripping of airconditioners in the event of the system being engaged. Contractors to include for CoC in book form in accordance to SANS 10139, Logbook, Mimic Diagrams in all foyers and entrances/exits.					
2.1	Addressable Fire Panel with User Interface - 2 Loop Small Cabinet	No.	0			R -
2.2	Addressable Thermal Detector	No.	0			R -
2.3	Addressable Optical smoke detector - Polar White	No.	0			R -
2.4	Manual Call Point, red, flush mount with EN54 marking	No.	0			R -
2.5	Addressable Line Interface Unit	No.	0			R -

2.6	Control Switch	No.	0			R -
2.7	Conventional Zone Interface	No.	0			R -
2.8	Addressable Mains Relay Module	No.	0			R -
2.9	Extinguishing Control Unit	No.	0			R -
2.10	Addressable Combination Smoke and Heat Detector - Polar White	No.	0			R -
2.11	Emulated Control Switch	No.	0			R -
2.12	Addressable Sounder with Visual Indicator (RED)	No.	0			R -
2.13	Addressable Sounder with Visual Indicator (RED)	No.	0			R -
2.14	Addressable Thermal Detector - Polar White	No.	0			R -
2,15	Remove old panel, install new panel, make good and commission all devices	Sum				R -
Total Carried Forward						R -

ITEM	DESCRIPTION	UNIT	QTY	SUPPLY	INSTALL	AMOUNT R
3	**PANEL 2 - ATNS/SAWS CONTROL TOWER**					

	Supply and install Class A Addressable fire detection system, equipment and cabling as per Fire Engineer specifications. This includes for safety files, 12 month warranty on equipment. Ceiling detectors to include for remote alarm indicators. To allow for integration with electronic services specialist regarding automatic release for all doors and tripping of airconditioners in the event of the system being engaged. Contractors to include for CoC in book form in accordance to SANS 10139, Logbook, Mimic Diagrams in all foyers and entrances/exits.						
3.1	Addressable Fire Panel with User Interface - 2 Loop Small Cabinet	No.	1			R	-
3.2	Addressable Thermal Detector	No.	0			R	-
3.3	Addressable Optical smoke detector - Polar White	No.	131			R	-
3.4	Manual Call Point, red, flush mount with EN54 marking	No.	21			R	-
3.5	Addressable Line Interface Unit	No.	2			R	-
3.6	Control Switch	No.	0			R	-
3.7	Conventional Zone Interface	No.	0			R	-
3.8	Addressable Mains Relay Module	No.	16			R	-
3.9	Extinguishing Control Unit	No.	8			R	-
3.10	Addressable Combination Smoke and Heat Detector - Polar White	No.	0			R	-
3.11	Emulated Control Switch	No.	0			R	-
3.12	Addressable Sounder with Visual Indicator (RED)	No.	1			R	-
3.13	Addressable Sounder with Visual Indicator (RED)	No.	21			R	-
3.14	Addressable Thermal Detector - Polar White	No.	0			R	-
3,15	Remove old panel, install new panel, make good and commission all devices	Sum					

Total Carried Forward						R -

ITEM	DESCRIPTION	UNIT	QTY	SUPPLY	INSTALL	AMOUNT R
4	**PANEL 3 - TERMINAL BUILDING BASEMENT** Supply and install Class A Addressable fire detection system, equipment and cabling as per Fire Engineer specifications. This includes for safety files, 12 month warranty on equipment. Ceiling detectors to include for remote alarm indicators. To allow for integration with electronic services specialist regarding automatic release for all doors and tripping of airconditioners in the event of the system being engaged. Contractors to include for CoC in book form in accordance to SANS 10139, Logbook, Mimic Diagrams in all foyers and entrances/exits.					
4.1	Addressable Fire Panel with User Interface - 2 Loop Small Cabinet	No.	1			R -
4.2	Addressable Thermal Detector	No.	0			R -
4.3	Addressable Optical smoke detector - Polar White	No.	196			R -
4.4	Manual Call Point, red, flush mount with EN54 marking	No.	22			R -
4.5	Addressable Line Interface Unit	No.	13			R -
4.6	Control Switch	No.	1			R -
4.7	Conventional Zone Interface	No.	0			R -
4.8	Addressable Mains Relay Module	No.	44			R -
4.9	Extinguishing Control Unit	No.	12			R -
4.10	Addressable Combination Smoke and Heat Detector - Polar White	No.	0			R -

4.11	Emulated Control Switch	No.	0			R -
4.12	Addressable Sounder with Visual Indicator (RED)	No.	2			R -
4.13	Addressable Sounder with Visual Indicator (RED)	No.	22			R -
4.14	Addressable Thermal Detector - Polar White	No.	52			R -
4,15	Remove old panel, install new panel, make good and commission all devices	Sum				
Total Carried Forward to Summary						R -

ITEM	DESCRIPTION	UNIT	QTY	SUPPLY	INSTALL	AMOUNT R
5	**PANEL 4 - TERMINAL BUILDING ARRIVALS** Supply and install Class A Addressable fire detection system, equipment and cabling as per Fire Engineer specifications. This includes for safety files, 12 month warranty on equipment. Ceiling detectors to include for remote alarm indicators. To allow for integration with electronic services specialist regarding automatic release for all doors and tripping of airconditioners in the event of the system being engaged. Contractors to include for CoC in book form in accordance to SANS 10139, Logbook, Mimic Diagrams in all foyers and entrances/exits.					
5.1	Addressable Fire Panel with User Interface - 2 Loop Small Cabinet	No.	1			R -
5.2	Addressable Thermal Detector	No.	0			R -
5.3	Addressable Optical smoke detector - Polar White	No.	276			R -

5.4	Manual Call Point, red, flush mount with EN54 marking	No.	16			R -
5.5	Addressable Line Interface Unit	No.	0			R -
5.6	Control Switch	No.	0			R -
5.7	Conventional Zone Interface	No.	0			R -
5.8	Addressable Mains Relay Module	No.	34			R -
5.9	Extinguishing Control Unit	No.	0			R -
5.10	Addressable Combination Smoke and Heat Detector - Polar White	No.	8			R -
5.11	Emulated Control Switch	No.	0			R -
5.12	Addressable Sounder with Visual Indicator (RED)	No.	0			R -
5.13	Addressable Sounder with Visual Indicator (RED)	No.	22			R -
5.14	Addressable Thermal Detector - Polar White	No.	2			R -
5,15	Remove old panel, install new panel, make good and commission all devices	Sum				
Total Carried Forward						R -

ITEM	DESCRIPTION	UNIT	QTY	SUPPLY	INSTALL	AMOUNT R
6	**PANEL 5 - TERMINAL BUILDING ARRIVALS CORRIDOR**					

	Supply and install Class A Addressable fire detection system, equipment and cabling as per Fire Engineer specifications. This includes for safety files, 12 month warranty on equipment. Ceiling detectors to include for remote alarm indicators. To allow for integration with electronic services specialist regarding automatic release for all doors and tripping of airconditioners in the event of the system being engaged. Contractors to include for CoC in book form in accordance to SANS 10139, Logbook, Mimic Diagrams in all foyers and entrances/exits.						
6.1	Addressable Fire Panel with User Interface - 2 Loop Small Cabinet	No.	1			R	-
6.2	Addressable Thermal Detector	No.	0			R	-
6.3	Addressable Optical smoke detector - Polar White	No.	252			R	-
6.4	Manual Call Point, red, flush mount with EN54 marking	No.	27			R	-
6.5	Addressable Line Interface Unit	No.	0			R	-
6.6	Control Switch	No.	0			R	-
6.7	Conventional Zone Interface	No.	0			R	-
6.8	Addressable Mains Relay Module	No.	49			R	-
6.9	Extinguishing Control Unit	No.	3			R	-
6.10	Addressable Combination Smoke and Heat Detector - Polar White	No.	1			R	-
6.11	Emulated Control Switch	No.	0			R	-
6.12	Addressable Sounder with Visual Indicator (RED)	No.	0			R	-
6.13	Addressable Sounder with Visual Indicator (RED)	No.	25			R	-
6.14	Addressable Thermal Detector - Polar White	No.	1			R	-
6,15	Remove old panel, install new panel, make good and commission all devices	Sum					

Total Carried Forward to Summary						R -

ITEM	DESCRIPTION	UNIT	QTY	SUPPLY	INSTALL	AMOUNT R
7	**PANEL 6 - TERMINAL BUILDING ARRIVALS MEZZ CORRIDOR** Supply and install Class A Addressable fire detection system, equipment and cabling as per Fire Engineer specifications. This includes for safety files, 12 month warranty on equipment. Ceiling detectors to include for remote alarm indicators. To allow for integration with electronic services specialist regarding automatic release for all doors and tripping of airconditioners in the event of the system being engaged. Contractors to include for CoC in book form in accordance to SANS 10139, Logbook, Mimic Diagrams in all foyers and entrances/exits.					
7.1	Addressable Fire Panel with User Interface - 2 Loop Small Cabinet	No.	1			R -
7.2	Addressable Thermal Detector	No.	0			R -
7.3	Addressable Optical smoke detector - Polar White	No.	126			R -
7.4	Manual Call Point, red, flush mount with EN54 marking	No.	12			R -
7.5	Addressable Line Interface Unit	No.	0			R -
7.6	Control Switch	No.	0			R -
7.7	Conventional Zone Interface	No.	0			R -
7.8	Addressable Mains Relay Module	No.	23			R -
7.9	Extinguishing Control Unit	No.	0			R -
7.10	Addressable Combination Smoke and Heat Detector - Polar White	No.	3			R -

7.11	Emulated Control Switch	No.	0			R	-
7.12	Addressable Sounder with Visual Indicator (RED)	No.	1			R	-
7.13	Addressable Sounder with Visual Indicator (RED)	No.	12			R	-
7.14	Addressable Thermal Detector - Polar White	No.	0			R	-
7,15	Remove old panel, install new panel, make good and commission all devices	Sum					
Total Carried Forward to Summary						R	-

ITEM	DESCRIPTION	UNIT	QTY	SUPPLY	INSTALL	AMOUNT R	
8	**PANEL 7 - ARRIVALS CEILING VOID** Supply and install Class A Addressable fire detection system, equipment and cabling as per Fire Engineer specifications. This includes for safety files, 12 month warranty on equipment. Ceiling detectors to include for remote alarm indicators. To allow for integration with electronic services specialist regarding automatic release for all doors and tripping of airconditioners in the event of the system being engaged. Contractors to include for CoC in book form in accordance to SANS 10139, Logbook, Mimic Diagrams in all foyers and entrances/exits.						
8.1	Addressable Fire Panel with User Interface - 2 Loop Small Cabinet	No.	1			R	-
8.2	Addressable Thermal Detector	No.	0			R	-
8.3	Addressable Optical smoke detector - Polar White	No.	245			R	-
8.4	Manual Call Point, red, flush mount with EN54 marking	No.	7			R	-

8.5	Addressable Line Interface Unit	No.	0			R -
8.6	Control Switch	No.	0			R -
8.7	Conventional Zone Interface	No.	0			R -
8.8	Addressable Mains Relay Module	No.	0			R -
8.9	Extinguishing Control Unit	No.	0			R -
8.10	Addressable Combination Smoke and Heat Detector - Polar White	No.	1			R -
8.11	Emulated Control Switch	No.	0			R -
8.12	Addressable Sounder with Visual Indicator (RED)	No.	0			R -
8.13	Addressable Sounder with Visual Indicator (RED)	No.	4			R -
8.14	Addressable Thermal Detector - Polar White	No.	1			R -
8,15	Remove old panel, install new panel, make good and commission all devices	Sum				
Total Carried Forward to Summary						R -

ITEM	DESCRIPTION	UNIT	QTY	SUPPLY	INSTALL	AMOUNT R
9	**PANEL 8 - TERMINAL BUILDING DEPARTURES**					

	Supply and install Class A Addressable fire detection system, equipment and cabling as per Fire Engineer specifications. This includes for safety files, 12 month warranty on equipment. Ceiling detectors to include for remote alarm indicators. To allow for integration with electronic services specialist regarding automatic release for all doors and tripping of airconditioners in the event of the system being engaged. Contractors to include for CoC in book form in accordance to SANS 10139, Logbook, Mimic Diagrams in all foyers and entrances/exits.						
9.1	Addressable Fire Panel with User Interface - 2 Loop Small Cabinet	No.	1			R	-
9.2	Addressable Thermal Detector	No.	0			R	-
9.3	Addressable Optical smoke detector - Polar White	No.	267			R	-
9.4	Manual Call Point, red, flush mount with EN54 marking	No.	8			R	-
9.5	Addressable Line Interface Unit	No.	1			R	-
9.6	Control Switch	No.	0			R	-
9.7	Conventional Zone Interface	No.	0			R	-
9.8	Addressable Mains Relay Module	No.	20			R	-
9.9	Extinguishing Control Unit	No.	0			R	-
9.10	Addressable Combination Smoke and Heat Detector - Polar White	No.	1			R	-
9.11	Emulated Control Switch	No.	0			R	-
9.12	Addressable Sounder with Visual Indicator (RED)	No.	0			R	-
9.13	Addressable Sounder with Visual Indicator (RED)	No.	12			R	-
9.14	Addressable Thermal Detector - Polar White	No.	4			R	-
9,15	Remove old panel, install new panel, make good and commission all devices	Sum					

Total Carried Forward to Summary						R -

ITEM	DESCRIPTION	UNIT	QTY	SUPPLY	INSTALL	AMOUNT R
10	**PANEL 9 - TERMINAL BUILDING DEPARTURES CORRIDOR** Supply and install Class A Addressable fire detection system, equipment and cabling as per Fire Engineer specifications. This includes for safety files, 12 month warranty on equipment. Ceiling detectors to include for remote alarm indicators. To allow for integration with electronic services specialist regarding automatic release for all doors and tripping of airconditioners in the event of the system being engaged. Contractors to include for CoC in book form in accordance to SANS 10139, Logbook, Mimic Diagrams in all foyers and entrances/exits.					
10.1	Addressable Fire Panel with User Interface - 2 Loop Small Cabinet	No.	1			R -
10.2	Addressable Thermal Detector	No.	0			R -
10.3	Addressable Optical smoke detector - Polar White	No.	112			R -
10.4	Manual Call Point, red, flush mount with EN54 marking	No.	11			R -
10.5	Addressable Line Interface Unit	No.	0			R -
10.6	Control Switch	No.	0			R -
10.7	Conventional Zone Interface	No.	0			R -
10.8	Addressable Mains Relay Module	No.	13			R -
10.9	Extinguishing Control Unit	No.	0			R -
10.10	Addressable Combination Smoke and Heat Detector - Polar White	No.	0			R -

10.11	Emulated Control Switch	No.	0			R -
10.12	Addressable Sounder with Visual Indicator (RED)	No.	0			R -
10.13	Addressable Sounder with Visual Indicator (RED)	No.	11			R -
10.14	Addressable Thermal Detector - Polar White	No.	0			R -
10.15	Remove old panel, install new panel, make good and commission all devices	Sum				
Total Carried Forward to Summary						R -

ITEM	DESCRIPTION	UNIT	QTY	SUPPLY	INSTALL	AMOUNT R
11	**PANEL 10 - AIRLINE OFFICES TOC AND PLANT ROOM (GLOBAL PANEL)** Supply and install Class A Addressable fire detection system, equipment and cabling as per Fire Engineer specifications. This includes for safety files, 12 month warranty on equipment. Ceiling detectors to include for remote alarm indicators. To allow for integration with electronic services specialist regarding automatic release for all doors and tripping of airconditioners in the event of the system being engaged. Contractors to include for CoC in book form in accordance to SANS 10139, Logbook, Mimic Diagrams in all foyers and entrances/exits.					
11.1	Addressable Fire Panel with User Interface - 2 Loop Small Cabinet	No.	1			R -
11.2	Addressable Thermal Detector	No.	0			R -
11.3	Addressable Optical smoke detector - Polar White	No.	216			R -

11.4	Manual Call Point, red, flush mount with EN54 marking	No.	0			R -
11.5	Addressable Line Interface Unit	No.	12			R -
11.6	Control Switch	No.	0			R -
11.7	Conventional Zone Interface	No.	0			R -
11.8	Addressable Mains Relay Module	No.	64			R -
11.9	Extinguishing Control Unit	No.	1			R -
11.10	Addressable Combination Smoke and Heat Detector - Polar White	No.	3			R -
11.11	Emulated Control Switch	No.	1			R -
11.12	Addressable Sounder with Visual Indicator (RED)	No.	0			R -
11.13	Addressable Sounder with Visual Indicator (RED)	No.	9			R -
11.14	Addressable Thermal Detector - Polar White	No.	1			R -
11.15	Remove old panel, install new panel, make good and commission all devices	Sum				
11.16	Network interface card equipped for fibre connection.	No.	1			R -
Total Carried Forward to Summary						R -

ITEM	DESCRIPTION	UNIT	QTY	SUPPLY	INSTALL	AMOUNT R
12	**PANEL 11 - MULTI-STOREY PARKING AND OFFICES**					

	Supply and install Class A Addressable fire detection system, equipment and cabling as per Fire Engineer specifications. This includes for safety files, 12 month warranty on equipment. Ceiling detectors to include for remote alarm indicators. To allow for integration with electronic services specialist regarding automatic release for all doors and tripping of airconditioners in the event of the system being engaged. Contractors to include for CoC in book form in accordance to SANS 10139, Logbook, Mimic Diagrams in all foyers and entrances/exits.						
12.1	Addressable Fire Panel with User Interface - 2 Loop Small Cabinet	No.	1			R	-
12.2	Addressable Thermal Detector	No.	0			R	-
12.3	Addressable Optical smoke detector - Polar White	No.	149			R	-
12.4	Manual Call Point, red, flush mount with EN54 marking	No.	29			R	-
12.5	Addressable Line Interface Unit	No.	0			R	-
12.6	Control Switch	No.	0			R	-
12.7	Conventional Zone Interface	No.	0			R	-
12.8	Addressable Mains Relay Module	No.	4			R	-
12.9	Extinguishing Control Unit	No.	0			R	-
12.10	Addressable Combination Smoke and Heat Detector - Polar White	No.	4			R	-
12.11	Emulated Control Switch	No.	0			R	-
12.12	Addressable Sounder with Visual Indicator (RED)	No.	1			R	-
12.13	Addressable Sounder with Visual Indicator (RED)	No.	26			R	-
12.14	Addressable Thermal Detector - Polar White	No.	1			R	-
12.15	Remove old panel, install new panel, make good and commission all devices	Sum					

Total Carried Forward to Summary						R -

ITEM	DESCRIPTION	UNIT	QTY	SUPPLY	INSTALL	AMOUNT R
13	**PANEL 12 - COOLING TOWER** Supply and install Class A Addressable fire detection system, equipment and cabling as per Fire Engineer specifications. This includes for safety files, 12 month warranty on equipment. Ceiling detectors to include for remote alarm indicators. To allow for integration with electronic services specialist regarding automatic release for all doors and tripping of airconditioners in the event of the system being engaged. Contractors to include for CoC in book form in accordance to SANS 10139, Logbook, Mimic Diagrams in all foyers and entrances/exits.					
13.1	Addressable Fire Panel with User Interface - 2 Loop Small Cabinet	No.	1			R -
13.2	Addressable Thermal Detector	No.	0			R -
13.3	Addressable Optical smoke detector - Polar White	No.	68			R -
13.4	Manual Call Point, red, flush mount with EN54 marking	No.	5			R -
13.5	Addressable Line Interface Unit	No.	0			R -
13.6	Control Switch	No.	0			R -
13.7	Conventional Zone Interface	No.	0			R -
13.8	Addressable Mains Relay Module	No.	2			R -
13.9	Extinguishing Control Unit	No.	1			R -
13.10	Addressable Combination Smoke and Heat Detector - Polar White	No.	1			R -

13.11	Emulated Control Switch	No.	0			R -
13.12	Addressable Sounder with Visual Indicator (RED)	No.	0			R -
13.13	Addressable Sounder with Visual Indicator (RED)	No.	5			R -
13.14	Addressable Thermal Detector - Polar White	No.	4			R -
13.15	Remove old panel, install new panel, make good and commission all devices	Sum				
Total Carried Forward to Summary						R -

ITEM	DESCRIPTION	UNIT	QTY	SUPPLY	INSTALL	AMOUNT R
14	**PANEL 13 - AIRFIELD SUBSTATION 1** Supply and install Class A Addressable fire detection system, equipment and cabling as per Fire Engineer specifications. This includes for safety files, 12 month warranty on equipment. Ceiling detectors to include for remote alarm indicators. To allow for integration with electronic services specialist regarding automatic release for all doors and tripping of airconditioners in the event of the system being engaged. Contractors to include for CoC in book form in accordance to SANS 10139, Logbook, Mimic Diagrams in all foyers and entrances/exits.					
14.1	Addressable Fire Panel with User Interface - 2 Loop Small Cabinet	No.	1			R -
14.2	Addressable Thermal Detector	No.	0			R -
14.3	Addressable Optical smoke detector - Polar White	No.	13			R -

14.4	Manual Call Point, red, flush mount with EN54 marking	No.	1			R -
14.5	Addressable Line Interface Unit	No.	0			R -
14.6	Control Switch	No.	0			R -
14.7	Conventional Zone Interface	No.	0			R -
14.8	Addressable Mains Relay Module	No.	6			R -
14.9	Extinguishing Control Unit	No.	3			R -
14.10	Addressable Combination Smoke and Heat Detector - Polar White	No.	0			R -
14.11	Emulated Control Switch	No.	0			R -
14.12	Addressable Sounder with Visual Indicator (RED)	No.	0			R -
14.13	Addressable Sounder with Visual Indicator (RED)	No.	1			R -
14.14	Addressable Thermal Detector - Polar White	No.	0			R -
14.15	Remove old panel, install new panel, make good and commission all devices	Sum				
Total Carried Forward to Summary						R -

ITEM	DESCRIPTION	UNIT	QTY	SUPPLY	INSTALL	AMOUNT R
15	**PANEL 14 - AIRFIELD SUBSTATION 2**					

	Supply and install Class A Addressable fire detection system, equipment and cabling as per Fire Engineer specifications. This includes for safety files, 12 month warranty on equipment. Ceiling detectors to include for remote alarm indicators. To allow for integration with electronic services specialist regarding automatic release for all doors and tripping of airconditioners in the event of the system being engaged. Contractors to include for CoC in book form in accordance to SANS 10139, Logbook, Mimic Diagrams in all foyers and entrances/exits.						
15.1	Addressable Fire Panel with User Interface - 2 Loop Small Cabinet	No.	1			R	-
15.2	Addressable Thermal Detector	No.	0			R	-
15.3	Addressable Optical smoke detector - Polar White	No.	8			R	-
15.4	Manual Call Point, red, flush mount with EN54 marking	No.	0			R	-
15.5	Addressable Line Interface Unit	No.	0			R	-
15.6	Control Switch	No.	0			R	-
15.7	Conventional Zone Interface	No.	0			R	-
15.8	Addressable Mains Relay Module	No.	6			R	-
15.9	Extinguishing Control Unit	No.	3			R	-
15.10	Addressable Combination Smoke and Heat Detector - Polar White	No.	0			R	-
15.11	Emulated Control Switch	No.	0			R	-
15.12	Addressable Sounder with Visual Indicator (RED)	No.	0			R	-
15.13	Addressable Sounder with Visual Indicator (RED)	No.	1			R	-
15.14	Addressable Thermal Detector - Polar White	No.	1			R	-
15.15	Remove old panel, install new panel, make good and commission all devices	Sum					

Total Carried Forward to Summary						R -

ITEM	DESCRIPTION	UNIT	QTY	SUPPLY	INSTALL	AMOUNT R
16	**PANEL 15 - AIRFIELD SUBSTATION 3** Supply and install Class A Addressable fire detection system, equipment and cabling as per Fire Engineer specifications. This includes for safety files, 12 month warranty on equipment. Ceiling detectors to include for remote alarm indicators. To allow for integration with electronic services specialist regarding automatic release for all doors and tripping of airconditioners in the event of the system being engaged. Contractors to include for CoC in book form in accordance to SANS 10139, Logbook, Mimic Diagrams in all foyers and entrances/exits.					
16.1	Addressable Fire Panel with User Interface - 2 Loop Small Cabinet	No.	1			R -
16.2	Addressable Thermal Detector	No.	0			R -
16.3	Addressable Optical smoke detector - Polar White	No.	8			R -
16.4	Manual Call Point, red, flush mount with EN54 marking	No.	0			R -
16.5	Addressable Line Interface Unit	No.	0			R -
16.6	Control Switch	No.	0			R -
16.7	Conventional Zone Interface	No.	0			R -
16.8	Addressable Mains Relay Module	No.	6			R -
16.9	Extinguishing Control Unit	No.	3			R -

16.10	Addressable Combination Smoke and Heat Detector - Polar White	No.	0			R -
16.11	Emulated Control Switch	No.	0			R -
16.12	Addressable Sounder with Visual Indicator (RED)	No.	0			R -
16.13	Addressable Sounder with Visual Indicator (RED)	No.	1			R -
16.14	Addressable Thermal Detector - Polar White	No.	1			R -
16.15	Remove old panel, install new panel, make good and commission all devices	Sum				
Total Carried Forward to Summary						R -

ITEM	DESCRIPTION	UNIT	QTY	SUPPLY	INSTALL	AMOUNT R
17	**PANEL 16 - AIRFIELD SUBSTATION 4** Supply and install Class A Addressable fire detection system, equipment and cabling as per Fire Engineer specifications. This includes for safety files, 12 month warranty on equipment. Ceiling detectors to include for remote alarm indicators. To allow for integration with electronic services specialist regarding automatic release for all doors and tripping of airconditioners in the event of the system being engaged. Contractors to include for CoC in book form in accordance to SANS 10139, Logbook, Mimic Diagrams in all foyers and entrances/exits.					
17.1	Addressable Fire Panel with User Interface - 2 Loop Small Cabinet	No.	1			R -
17.2	Addressable Thermal Detector	No.	0			R -

17.3	Addressable Optical smoke detector - Polar White	No.	12			R -
17.4	Manual Call Point, red, flush mount with EN54 marking	No.	1			R -
17.5	Addressable Line Interface Unit	No.	0			R -
17.6	Control Switch	No.	0			R -
17.7	Conventional Zone Interface	No.	0			R -
17.8	Addressable Mains Relay Module	No.	6			R -
17.9	Extinguishing Control Unit	No.	3			R -
17.10	Addressable Combination Smoke and Heat Detector - Polar White	No.	0			R -
17.11	Emulated Control Switch	No.	0			R -
17.12	Addressable Sounder with Visual Indicator (RED)	No.	0			R -
17.13	Addressable Sounder with Visual Indicator (RED)	No.	1			R -
17.14	Addressable Thermal Detector - Polar White	No.	1			R -
17.15	Remove old panel, install new panel, make good and commission all devices	Sum				
Total Carried Forward to Summary						R -

ITEM	DESCRIPTION	UNIT	QTY	SUPPLY	INSTALL	AMOUNT R
18	**PANEL 17 - MB1, MB2, MB3 (GLOBAL PANEL)** **(NEW PANEL 1)**					

	Supply and install Class A Addressable fire detection system, equipment and cabling as per Fire Engineer specifications. This includes for safety files, 12 month warranty on equipment. Ceiling detectors to include for remote alarm indicators. To allow for integration with electronic services specialist regarding automatic release for all doors and tripping of airconditioners in the event of the system being engaged. Contractors to include for CoC in book form in accordance to SANS 10139, Logbook, Mimic Diagrams in all foyers and entrances/exits.						
18.1	Addressable Fire Panel with User Interface - 2 Loop Small Cabinet	No.	1			R	-
18.2	Addressable Thermal Detector	No.	1			R	-
18.3	Addressable Optical smoke detector - Polar White	No.	71			R	-
18.4	Manual Call Point, red, flush mount with EN54 marking	No.	7			R	-
18.5	Addressable Line Interface Unit	No.	1			R	-
18.6	Control Switch	No.	0			R	-
18.7	Conventional Zone Interface	No.	0			R	-
18.8	Addressable Mains Relay Module	No.	0			R	-
18.9	Extinguishing Control Unit	No.	0			R	-
18.10	Addressable Combination Smoke and Heat Detector - Polar White	No.	0			R	-
18.11	Emulated Control Switch	No.	0			R	-
18.12	Addressable Sounder with Visual Indicator (RED)	No.	0			R	-
18.13	Addressable Sounder with Visual Indicator (RED)	No.	7			R	-
18.14	Addressable Thermal Detector - Polar White	No.	0			R	-
18.15	Remove old panel, install new panel, make good and commission all devices	Sum					

18.16	Network interface card equipped for fibre connection.	No.	3			R -
Total Carried Forward to Summary						R -

ITEM	DESCRIPTION	UNIT	QTY	SUPPLY	INSTALL	AMOUNT R
19	**PANEL 18 - AG1, AG2, AG3** Supply and install Class A Addressable fire detection system, equipment and cabling as per Fire Engineer specifications. This includes for safety files, 12 month warranty on equipment. Ceiling detectors to include for remote alarm indicators. To allow for integration with electronic services specialist regarding automatic release for all doors and tripping of airconditioners in the event of the system being engaged. Contractors to include for CoC in book form in accordance to SANS 10139, Logbook, Mimic Diagrams in all foyers and entrances/exits.					
19.1	Addressable Fire Panel with User Interface - 2 Loop Small Cabinet	No.	1			R -
19.2	Addressable Thermal Detector	No.	0			R -
19.3	Addressable Optical smoke detector - Polar White	No.	0			R -
19.4	Manual Call Point, red, flush mount with EN54 marking	No.	8			R -
19.5	Addressable Line Interface Unit	No.	0			R -
19.6	Control Switch	No.	0			R -
19.7	Conventional Zone Interface	No.	0			R -
19.8	Addressable Mains Relay Module	No.	0			R -
19.9	Extinguishing Control Unit	No.	0			R -

19.10	Addressable Combination Smoke and Heat Detector - Polar White	No.	0			R -
19.11	Emulated Control Switch	No.	0			R -
19.12	Addressable Sounder with Visual Indicator (RED)	No.	0			R -
19.13	Addressable Sounder with Visual Indicator (RED)	No.	9			R -
19.14	Addressable Thermal Detector - Polar White	No.	0			R -
19.15	Remove old panel, install new panel, make good and commission all devices	Sum				
Total Carried Forward to Summary						R -

ITEM	DESCRIPTION	UNIT	QTY	SUPPLY	INSTALL	AMOUNT R
20	**PANEL 19 - CRASH FIRE RESCUE (GLOBAL PANEL)** Supply and install Class A Addressable fire detection system, equipment and cabling as per Fire Engineer specifications. This includes for safety files, 12 month warranty on equipment. Ceiling detectors to include for remote alarm indicators. To allow for integration with electronic services specialist regarding automatic release for all doors and tripping of airconditioners in the event of the system being engaged. Contractors to include for CoC in book form in accordance to SANS 10139, Logbook, Mimic Diagrams in all foyers and entrances/exits.					
20.1	Addressable Fire Panel with User Interface - 2 Loop Small Cabinet	No.	1			R -
20.2	Addressable Thermal Detector	No.	11			R -

20.3	Addressable Optical smoke detector - Polar White	No.	62			R -
20.4	Manual Call Point, red, flush mount with EN54 marking	No.	12			R -
20.5	Addressable Line Interface Unit	No.	1			R -
20.6	Control Switch	No.	0			R -
20.7	Conventional Zone Interface	No.	0			R -
20.8	Addressable Mains Relay Module	No.	3			R -
20.9	Extinguishing Control Unit	No.	0			R -
20.10	Addressable Combination Smoke and Heat Detector - Polar White	No.	0			R -
20.11	Emulated Control Switch	No.	0			R -
20.12	Addressable Sounder with Visual Indicator (RED)	No.	0			R -
20.13	Addressable Sounder with Visual Indicator (RED)	No.	8			R -
20.14	Addressable Thermal Detector - Polar White	No.	3			R -
20.15	Remove old panel, install new panel, make good and commission all devices	Sum				
Total Carried Forward to Summary						R -

ITEM	DESCRIPTION	UNIT	QTY	SUPPLY	INSTALL	AMOUNT R
21	**PANEL 20 - KING SHAKA INT CYBERPORT** **(EXCLUDED)**					

	Supply and install Class A Addressable fire detection system, equipment and cabling as per Fire Engineer specifications. This includes for safety files, 12 month warranty on equipment. Ceiling detectors to include for remote alarm indicators. To allow for integration with electronic services specialist regarding automatic release for all doors and tripping of airconditioners in the event of the system being engaged. Contractors to include for CoC in book form in accordance to SANS 10139, Logbook, Mimic Diagrams in all foyers and entrances/exits.						
21.1	Addressable Fire Panel with User Interface - 2 Loop Small Cabinet	No.	1			R	-
21.2	Addressable Thermal Detector	No.	0			R	-
21.3	Addressable Optical smoke detector - Polar White	No.	0			R	-
21.4	Manual Call Point, red, flush mount with EN54 marking	No.	0			R	-
21.5	Addressable Line Interface Unit	No.	0			R	-
21.6	Control Switch	No.	0			R	-
21.7	Conventional Zone Interface	No.	0			R	-
21.8	Addressable Mains Relay Module	No.	0			R	-
21.9	Extinguishing Control Unit	No.	0			R	-
21.10	Addressable Combination Smoke and Heat Detector - Polar White	No.	0			R	-
21.11	Emulated Control Switch	No.	0			R	-
21.12	Addressable Sounder with Visual Indicator (RED)	No.	0			R	-
21.13	Addressable Sounder with Visual Indicator (RED)	No.	0			R	-
21.14	Addressable Thermal Detector - Polar White	No.	0			R	-
21.15	Remove old panel, install new panel, make good and commission all devices	Sum					

Total Carried Forward to Summary						R -

ITEM	DESCRIPTION	UNIT	QTY	SUPPLY	INSTALL	AMOUNT R
22	**PANEL 21 - FUEL FARM** Supply and install Class A Addressable fire detection system, equipment and cabling as per Fire Engineer specifications. This includes for safety files, 12 month warranty on equipment. Ceiling detectors to include for remote alarm indicators. To allow for integration with electronic services specialist regarding automatic release for all doors and tripping of airconditioners in the event of the system being engaged. Contractors to include for CoC in book form in accordance to SANS 10139, Logbook, Mimic Diagrams in all foyers and entrances/exits.					
22.1	Addressable Fire Panel with User Interface - 2 Loop Small Cabinet	No.	1			R -
22.2	Addressable Thermal Detector	No.	0			R -
22.3	Addressable Optical smoke detector - Polar White	No.	2			R -
22.4	Manual Call Point, red, flush mount with EN54 marking	No.	2			R -
22.5	Addressable Line Interface Unit	No.	3			R -
22.6	Control Switch	No.	0			R -
22.7	Conventional Zone Interface	No.	1			R -
22.8	Addressable Mains Relay Module	No.	1			R -
22.9	Extinguishing Control Unit	No.	0			R -
22.10	Addressable Combination Smoke and Heat Detector - Polar White	No.	1			R -

22.11	Emulated Control Switch	No.	0			R -
22.12	Addressable Sounder with Visual Indicator (RED)	No.	0			R -
22.13	Addressable Sounder with Visual Indicator (RED)	No.	2			R -
22.14	Addressable Thermal Detector - Polar White	No.	1			R -
22.15	Remove old panel, install new panel, make good and commission all devices	Sum				
Total Carried Forward to Summary						R -

ITEM	DESCRIPTION	UNIT	QTY	SUPPLY	INSTALL	AMOUNT R
23	**PANEL 22 - FUEL FORWARD DEPOT** Supply and install Class A Addressable fire detection system, equipment and cabling as per Fire Engineer specifications. This includes for safety files, 12 month warranty on equipment. Ceiling detectors to include for remote alarm indicators. To allow for integration with electronic services specialist regarding automatic release for all doors and tripping of airconditioners in the event of the system being engaged. Contractors to include for CoC in book form in accordance to SANS 10139, Logbook, Mimic Diagrams in all foyers and entrances/exits.					
23.1	Addressable Fire Panel with User Interface - 2 Loop Small Cabinet	No.	1			R -
23.2	Addressable Thermal Detector	No.	0			R -
23.3	Addressable Optical smoke detector - Polar White	No.	12			R -

23.4	Manual Call Point, red, flush mount with EN54 marking	No.	2			R -
23.5	Addressable Line Interface Unit	No.	0			R -
23.6	Control Switch	No.	0			R -
23.7	Conventional Zone Interface	No.	0			R -
23.8	Addressable Mains Relay Module	No.	0			R -
23.9	Extinguishing Control Unit	No.	0			R -
23.10	Addressable Combination Smoke and Heat Detector - Polar White	No.	1			R -
23.11	Emulated Control Switch	No.	0			R -
23.12	Addressable Sounder with Visual Indicator (RED)	No.	0			R -
23.13	Addressable Sounder with Visual Indicator (RED)	No.	2			R -
23.14	Addressable Thermal Detector - Polar White	No.	1			R -
23.15	Remove old panel, install new panel, make good and commission all devices	Sum				
23.16	Network interface card equipped for fibre connection.	No.	1			R -
Total Carried Forward to Summary						R -

ITEM	DESCRIPTION	UNIT	QTY	SUPPLY	INSTALL	AMOUNT R
24	**PANEL 23 - T1 SUBSTATION**					

	Supply and install Class A Addressable fire detection system, equipment and cabling as per Fire Engineer specifications. This includes for safety files, 12 month warranty on equipment. Ceiling detectors to include for remote alarm indicators. To allow for integration with electronic services specialist regarding automatic release for all doors and tripping of airconditioners in the event of the system being engaged. Contractors to include for CoC in book form in accordance to SANS 10139, Logbook, Mimic Diagrams in all foyers and entrances/exits.						
24.1	Addressable Fire Panel with User Interface - 2 Loop Small Cabinet	No.	1			R	-
24.2	Addressable Thermal Detector	No.	0			R	-
24.3	Addressable Optical smoke detector - Polar White	No.	5			R	-
24.4	Manual Call Point, red, flush mount with EN54 marking	No.	1			R	-
24.5	Addressable Line Interface Unit	No.	0			R	-
24.6	Control Switch	No.	0			R	-
24.7	Conventional Zone Interface	No.	0			R	-
24.8	Addressable Mains Relay Module	No.	1			R	-
24.9	Extinguishing Control Unit	No.	1			R	-
24.10	Addressable Combination Smoke and Heat Detector - Polar White	No.	0			R	-
24.11	Emulated Control Switch	No.	0			R	-
24.12	Addressable Sounder with Visual Indicator (RED)	No.	1			R	-
24.13	Addressable Sounder with Visual Indicator (RED)	No.	0			R	-
24.14	Addressable Thermal Detector - Polar White	No.	0			R	-
24.15	Remove old panel, install new panel, make good and commission all devices	Sum					

Total Carried Forward to Summary						R -

ITEM	DESCRIPTION	UNIT	QTY	SUPPLY	INSTALL	AMOUNT R
25	**CABLING**					
25.1	PH30 cabling, 2-core, 1mm, Stranded Cable complete with all accessories	m	42460			R -
25.2	P9000 Trunking 400 mm complete with elbows, junction boxes, bends, clamps, fittings and all necessary accessories	m	1208			R -
25.3	P9000 Trunking 100 mm complete with elbows, junction boxes, bends, clamps, fittings and all necessary accessories	m	4347			R -
25.4	Address Labels for Devices	No.	3752			R -
25.5	Labels for Conduits and Round Boxes	No.	4400			R -
25.6	Supply and install 400 mm galvanised, perforated, medium duty, cable tray complete with elbows, junction boxes, bends, clamps, fittings and all necessary accessories	m	1150			R -
25.7	Supply and install 100 mm galvanised, perforated, medium duty, cable tray complete with elbows, junction boxes, bends, clamps, fittings and all necessary accessories	m	4140			R -
25.8	PVC Round Boxes	m	4400			R -
25.9	Supply and install M25 uPVC conduit complete with elbows, junction boxes, clamps and fittings	m	14012			R -
25.10	25 mm Sprague Flexible complete with all saddles, clamps, ties, and accessories	m	3716			R -

Total Carried Forward to Summary						R -

ITEM	DESCRIPTION	UNIT	QTY	SUPPLY	INSTALL	AMOUNT R
26	**GAS SUPPRESSION SYSTEM**					
	Provide the following Gas Cylinders as per Scope of Work including delivery, installation and commissioning, complete with all fixings and filled with FM200 gas.					
26.1	FM200 Gas Suppression Cylinder 180 litres	No.	2			R -
26.2	FM200 Gas Suppression Cylinder 150 litres	No.	4			R -
26.3	FM200 Gas Suppression Cylinder 120 litres	No.	5			R -
26.4	FM200 Gas Suppression Cylinder 100 litres	No.	7			R -
26.5	FM200 Gas Suppression Cylinder 80 litres	No.	9			R -
26.6	FM200 Gas Suppression Cylinder 50 litres	No.	9			R -

26.7	FM200 Gas Suppression Cylinder 25 litres	No.	9			R -
26.8	FM200 Gas Suppression Cylinder 15 litres	No.	8			R -
Total Carried Forward to Summary						R -

ITEM	DESCRIPTION	UNIT	QTY	SUPPLY	INSTALL	AMOUNT R
27	**PASSIVE FIRE PROTECTION**					
27,1	Install fire curtains in order to seal rooms during fire emergency. Curtains must be automatically triggered by the Gas Control Unit, form an airtight seal using velcro along the blanket perimeter and be easily removable for ease of maintenance.	No	28			R -
27.2	Fireproof seals to be installed in penetrations and cable trenches in order to seal rooms (like substations, server rooms, wirerooms, transformer rooms, generator rooms and similar).	No	80			R -
27.3	Intumescent painting of each cable that penetrate through walls, ceilings and floors.	m	5000			R -

Total Carried Forward to Summary						R -

ITEM	DESCRIPTION	UNIT	QTY	SUPPLY	INSTALL	AMOUNT R
28	**FIBRE INSTALLATION**					

28.1	Supply, install and commission 8-core 850-nm laser-optimized, 50-µm core diameter/125-µm cladding diameter graded-index multimode Fibre link between the following panels, c/w all splicing, terminations, splice and patch panels and dome enclosures to ensure complete installation: Panel 1 and Panel 10 Panel 1 and Panel 22 Fibre must be contained within Class 6 HDPE sleeve, orange colour. 600mm deep trench to be included	m	0			R	-
28.2	Supply, install and commission 8-core 1300-nm laser-optimized, 50-µm core diameter/125-µm cladding diameter graded-index multimode Fibre link between the following areas, c/w all splicing, terminations, splice and patch panels and dome enclosures to ensure complete installation: Panel 1 and Panel 10 Panel 1 and Panel 22 Fibre must be contained within Class 6 HDPE sleeve, orange colour. 600mm deep trench to be included	m	1400			R	-

Total Carried Forward to Summary						R -

ITEM	DESCRIPTION	UNIT	QTY	SUPPLY	INSTALL	AMOUNT R
29	**SMOKE BEAMS, BATTERY CHARGERS AND SCADA SYSTEM**					
29,1	OSID Imager 80 degrees coverage, 24 V DC	No.	15			R -
29.2	OSID Emitter - Standard Power, battery version	No.	15			R -
29.3	OSID Imager 7 degrees coverage, 24 V DC	No.	15			R -
29.4	Battery for Fire Panel 18 Ah 12 V	No.	23			R -

Total Carried Forward to Summary						R -

ITEM	DESCRIPTION	UNIT	QTY	SUPPLY	INSTALL	AMOUNT R
30	**SCADA SYSTEM**					
	Provide SCADA system including developing the software, remote access, maintenance and support service, back-up system, PC, installation, setup, training, consultation and commissioning. Include labour and travelling, licence for Windows and Microsoft Office Business, completed set of drawings and user manuals.					
30.1	SCADA System	Sum				R -

Total Carried Forward to Summary						R -

ITEM	DESCRIPTION	AMOUNT R
1	PRELIMINARY AND GENERAL	R -
2	PANEL 1 - CARGO TERMINAL (EXCLUDED)	R -
3	PANEL 2 - ATNS/SAWS CONTROL TOWER	R -
4	PANEL 3 - TERMINAL BUILDING BASEMENT	R -
5	PANEL 4 - TERMINAL BUILDING ARRIVALS	R -
6	PANEL 5 - TERMINAL BUILDING ARRIVALS CORRIDOR	R -
7	PANEL 6 - TERMINAL BUILDING ARRIVALS MEZZ CORRIDOR	R -
8	PANEL 7 - ARRIVALS CEILING VOID	R -

9	PANEL 8 - TERMINAL BUILDING DEPARTURES	R	-
10	PANEL 9 - TERMINAL BUILDING DEPARTURES CORRIDOR	R	-
11	PANEL 10 - AIRLINE OFFICES TOC AND PLANT ROOM (GLOBAL PANEL)	R	-
12	PANEL 11 - MULTI-STOREY PARKING AND OFFICES	R	-
13	PANEL 12 - COOLING TOWER	R	-
14	PANEL 13 - AIRFIELD SUBSTATION 1	R	-
15	PANEL 14 - AIRFIELD SUBSTATION 2	R	-
16	PANEL 15 - AIRFIELD SUBSTATION 3	R	-
17	PANEL 16 - AIRFIELD SUBSTATION 4	R	-
18	PANEL 17 - MB1, MB2, MB3 (GLOBAL PANEL) (NEW PANEL 1)	R	-
19	PANEL 18 - AG1, AG2, AG3	R	-
20	PANEL 19 - CRASH FIRE RESCUE (GLOBAL PANEL)	R	-
21	PANEL 20 - KING SHAKA INT CYBERPORT (EXCLUDED)	R	-
22	PANEL 21 - FUEL FARM	R	-
23	PANEL 22 - FUEL FORWARD DEPOT	R	-
24	PANEL 23 - T1 SUBSTATION	R	-
25	CABLING	R	-
26	GAS SUPPRESSION SYSTEM	R	-
27	PASSIVE FIRE PROTECTION	R	-
28	FIBRE INSTALLATION	R	-
29	SMOKE BEAMS, BATTERY CHARGERS	R	-
30	SCADA SYSTEM	R	-
SubTotal 1		R	-
Add 5% Contingency		R	-

SubTotal 2	R	-
Add VAT @ 15%	R	-
Grand Total	R	-

APPENDIX D – DATA SHEETS

KSIA FIRE DETECTION REPLACEMENT PROJECT

DETAILED DESIGN STAGE

Data Sheet No.	Description
1	OSID Smoke Detection Emitter / Imager
2	Addressable Call Point
3	Addressable Beacon
4	Addressable Horn Sounder
5	Analogue Optical Smoke Sensor
6	Analogue Thermal Sensor
7	Addressable Interface Module
8	Addressable Line Relay Module
9	Conventional Zone Interface
10	Line Isolator Module
11	Pluggable Base
12	Analogue Sensor Base
13	Addressable Fire Panel
14	Addressable Fire Panel Accessory

Description OSID Smoke Detection Emitter / Imager

Requirement	**Description**	**Offer**
Model No		
Description	OSID Smoke Detection Emitter / Imager	
Compatibility	All analogue addressable systems	
Mounting	Surface	
Wiring	0.2 - 4mm2	
Monitoring	Open and short circuit loop wiring faults	
Light Output	Equivalent to 1 Joule xenon element	
Operating voltage	20 - 30 Vdc (24Vdc nominal)	
Imager Current Consumption	8mA nominal, 31mA peak	
Power source	Loop or Battery	
Emitter Current Consumption	350uA @ 24Vdc	
Alarm Threshold Levels		
Low - Highest sensitivity / earliest alarm	20% (0.97 dB)	
Medium	35% (1.87 dB)	
High - Lowest sensitivity / maximum immunity to nuisance smoke conditions:	50% (3.01 dB)	
Adjustment angle	+-60 deg (horizontal, +-15 deg (vertical)	
Max misalignment angle	+-2 DEGREES	
Status LEDs	Fire Alarm (Red), Trouble / Power (Bi-color Yellow / Green)	
Application	Indoor installation	
EN60529 rating	IP44 for Electronics, IP66 forn Optics enclosure	
Temperature range	-10ºC to +55ºC	
Humidity range	0.2 to 0.95 RH (non condensing)	
EMC	CE marked (EEC89/336)	
Material	Moulded ABS	
Dimensions (WHD)	208 mm x 136 mm x 96 mm	
Event log	10,000 events	
Colour	Red	
Weight	125g	

Description Addressable Call Point

Requirement	Description	Offer
Model No		
Description	Addressable Call Point	
Compatibility	All analogue addressable systems	
Mounting	Addition of back box for surface or single gang socket box forsemi flush fixing with polycarbonate front cover.	
Wiring	Loop - 2 core plus screen, continuity must be maintained.	
Monitoring	Open and short circuit loop wiring faults	
Indication	Alarm LED (red)	
Operating Principle	Micro switch	
Operating voltage	16 -22 Vdc	
Current	600uA quiescent, 700uA alarm	
Application	Indoor installation	
EN60529 rating	IP24	
Temperature range	-30ºC to +70ºC	
Humidity range	0.2 to 0.95 RH (non condensing)	
EMC	CE marked (EEC89/336)	
Material	Moulded ABS	
Dimensions	93mm (H) x 89mm (W) x 27.5mm (D) – recessed	
	59.5mm (D) - with surface back box	
Colour	Red	
Weight	125g	

Description Addressable Beacon

Requirement	Description	Offer
Model No		
Description	Addressable Beacon	
Compatibility	All analogue addressable systems	
Mounting	Surface - Loop powered base, External powered - stand alone beacon base	
Wiring	2 core loop	
Monitoring	Open and short circuit fault	
Light Output	Equivalent to 1 Joule xenon element	
Strobe Frequency	20ms on, 1.1s off	
Operating voltage	Loop 19.5 - 20.5 Vdc, External 24 Vdc (nominal)	
Current	400uA quiescent, 2.5mA active	
Max number	60 per 1km loop (1.5mm2 cable, 50m to first device)	
Application	Indoor installation	
EN60529 rating	IP21C	
Temperature range	-10ºC to +75ºC	
Humidity range	0.2 to 0.95 RH (non condensing)	
EMC	CPD Compliant	
Material	Moulded thermoplastic	
Dimensions	106mm (Dia) x 49mm (H)	
Colour	White moulding/clear lens - illuminates red	
Weight	145g	

Description Addressable Horn Sounder

Requirement	Description	Offer
Model No		
Specification	EN54 Part 7	
Description	Addressable Horn Sounder	
Compatibility	All analogue addressable systems	
Mounting	Plugs into surface or semi recessed base	
Wiring	2 core loop or spur	
Monitoring	Open and short circuit fault sound level - self test facility	
Sound Output	102dBA (@ 1m)	
Sound Types	Tone 1 - continuous 980 Hz	
	Tone 2 - intermittent 980 Hz (0.5 secs on/off)	
	Tone 3 - two tone warble 980 Hz/670 Hz	
Operating voltage	Loop 19.5 - 20.5 Vdc, External 24 Vdc (nominal)	
Current	600uA quiescent, 5.5mA active	
Max number	40 per 1km loop (1.5mm2 cable, 50m to first device)	
Application	Indoor installation	
EN60529 rating	IP50	
Temperature range	-10ºC to +75ºC	
Humidity range	0.2 to 0.95 RH (non condensing)	
EMC	CPD Compliant	
Material	Moulded thermoplastic	
Dimensions	127mm (Dia) x 112mm (H)	
Colour	White or red	
Weight	339g - including base	

Description **Analogue Optical Smoke Sensor**

Requirement	Description	Offer
Model No		
Specification	EN54 Part 7	
Description	Analogue Optical Smoke Sensor	
Compatibility	All analogue addressable systems	
Sensitivity	2.3% OBS / meter	
Mounting	Plugs into surface or semi recessed base	
Area Coverage	100m² - subject to local codes	
Wiring	2 core loop or spur	
Monitoring	Open and short circuit fault, sensor removal and device type	
Indication	Alarm LED (red)	
Operating voltage	Address line pulsed 20V (19.5V to 20.5V). Max line less 4V	
Operating Temperature	58ºC to 75ºC - software settable	
Current	600uA quiescent, 700uA alarm	
Addressing Methos	7-way DIL switches in head	
Indication	Alarm LED (red)	
Detection Principle	Photo Electric Light Scatter	
Application	Indoor installation	
EN60529 rating	IP32	
Temperature range	-10ºC to +75ºC	
Humidity range	0.2 to 0.95 RH (non condensing)	
EMC	CE marked (EEC89/336)	
Material	Moulded ABS	
Dimensions	106mm (Dia) x 52mm (H)	
Height	60mm for surface base; 38mm for recessed base	
Colour	White	
Weight	105g - excluding base	

Description Analogue Thermal Sensor

Requirement	Description	Offer
Model No		
Specification	EN54 Part 5	
Description	Analogue Thermal Sensor	
Compatibility	All analogue addressable systems	
Sensitivity	Level 1 - 58ºC fixed temperature, Level 2 - 58ºC rate compensated, Level 3 - 75ºC rate of rise, Level 4 - 75ºC fixed temperature	
Mounting	Plugs into surface or semi recessed base	
Area Coverage	50m² - subject to local codes	
Wiring	2 core loop or spur	
Monitoring	Open and short circuit fault, sensor removal and device type	
Indication	Alarm LED (red)	
Operating voltage	Address line pulsed 20V (19.5V to 20.5V). Max line less 4V	
Operating Temperature	58ºC to 75ºC - software settable	
Current	600uA quiescent, 700uA alarm	
Addressing Methos	7-way DIL switches in head	
Application	Indoor installation	
EN60529 rating	IP32	
Temperature range	-10ºC to +75ºC	
Humidity range	0.2 to 0.95 RH (non condensing)	
EMC	CE marked (EEC89/336)	
Material	Moulded ABS	
Dimensions	106mm (Dia) x 52mm (H)	
Height	60mm for surface base; 38mm for recessed base	
Colour	White	
Weight	85g - excluding base	

Description Addressable Interface Module

Requirement	Description	Offer
Model No		
Specification	EN54 Part 18	
Description	Addressable interface unit	
Compatibility	All analogue addressable systems	
Mounting	Equipment cabinet DIN rail, or SMB-DIN 100, SMB-DIN200 surface boxes	
Wiring	2 core loop (screened)	
Monitoring	Input cable for open or short circuit fault by 3K9 ohm EOL resistor	
Input signal	Normally open - with 1K8 series resistor	
Interface type	Fire or non fire (set by software in panel)	
Indication	LED (red) flashing on operation	
Operating voltage	Pulsed loop (19.5 – 20.5V) with max 4 Volt line loss.	
Current	650uA quiescent, 700uA alarm	
Max cable distance	10m (from switching terminals) Cable must be screened and the screen terminated in the loop screen terminal	
Application	Indoor installation	
EN60529 rating	IP20	
Temperature range	-10ºC to +75ºC	
Humidity range	0.2 to 0.95 RH (non condensing)	
EMC	CE marked (EEC89/336)	
Material	Moulded ABS	
Dimensions	45mm (W) x 78mm (H) x 28mm (D)	
Colour	White	
Weight	40g	

Description Addressable Line Relay Module

Requirement	Description	Offer
Model No		
Specification	EN54 Part 18	
Description	Addressable Line Relay Module	
Compatibility	All analogue addressable systems	
Mounting	Equipment cabinet DIN rail, or SMB-DIN 100, SMB-DIN200 surface boxes	
Wiring	2 core loop (screened)	
Monitoring	Input cable for open or short circuit fault by 3K9 ohm EOL resistor	
Operating voltage	Pulsed loop (19.5 – 20.5V) with max 4 Volt line loss.	
Current	600uA quiescent, 700uA alarm	
Max switching Current	switching current 1 A	
Max switching voltage DC	switching voltage DC 30Vdc	
Max switching voltage AC	switching voltage AC 40Vac	
Indication	LED (red) flashing on operation	
Application	Indoor installation	
EN60529 rating	IP20	
Temperature range	-10ºC to +75ºC	
Humidity range	0.2 to 0.95 RH (non condensing)	
EMC	CE marked (EEC89/336)	
Material	Moulded ABS	
Dimensions	85mm (W) x 78mm (H) x 28mm (D)	
Colour	White	
Weight	40g	

Description Conventional Zone Interface

Requirement	Description	Offer
Model No		
Description	Conventional Zone Interface	
Compatibility	All analogue addressable systems	
Mounting	Equipment cabinet DIN rail, or SMB-DIN 100, SMB-DIN200 surface boxes	
Wiring	Two core screened loop to control panel, two core conventional zone to devices	
Monitoring	Monitoring Detector spurs - open and short circuit fault with 3K9 end of line resistor	
Area Coverage	Max 15 detectors	
Operating voltage	Loop 19.5 to 20.5Vdc, external 24Vdc (nominal)	
Current - loop powered	s	
Outputs	Output circuit switches external 24Vdc positive and negative to output contacts on alarm state	
Application	Indoor installation	
EN60529 rating	IP20	
Temperature range	-10ºC to +75ºC	
Humidity range	0.2 to 0.95 RH (non condensing)	
EMC	CE marked (EEC89/336)	
Material	Moulded ABS	
Dimensions	85mm (W) x 78mm (H) x 27mm (D)	
Colour	White	
Weight	78g	
Detector Compatability Requirements	GE Security range of conventional and IS detectors	
Publication No	PS1761	

Description Line Isolator Module

Requirement	Description	Offer
Model No		
Specification	EN54 Part 18	
Description	Line Isolator Module	
Compatibility	All analogue addressable systems	
Mounting	Equipment cabinet DIN rail, or SMB-DIN 100, SMB-DIN200 surface boxes	
Wiring	2 core "Class-A" return loop. Total loop = 75 ohms maximum. Between isolators = 18 ohms maximum.	
Monitoring	Loop - Short circuit protection	
Input signal	Normally open - with 1K8 series resistor	
Interface type	Fire or non fire (set by software in panel)	
Indication	LED (red) flashing on operation	
Operating voltage	Pulsed loop (19.5 – 20.5V) with max 4 Volt line loss.	
Current	600uA quiescent, 700uA alarm	
Max cable distance	10m (from switching terminals) Cable must be screened and the screen terminated in the loop screen terminal	
Application	Indoor installation	
EN60529 rating	IP20	
Temperature range	-10ºC to +75ºC	
Humidity range	0.2 to 0.95 RH (non condensing)	
EMC	CE marked (EEC89/336)	
Material	Moulded ABS	
Dimensions	45mm (W) x 78mm (H) x 28mm (D)	
Colour	White	
Weight	40g	

Description Pluggable Base

Requirement	Description	Offer
Model No		
Specification	EN54 Part 18	
Description	Pluggable Base	
Compatibility	All sounder beacons	
Mounting	Surface	
Terminals	2 core "Class-A" return loop. Total loop = 75 ohms maximum. Between isolators = 18 ohms maximum.	
Monitoring	Loop +ve in/out	
	Loop -ve in/out	
	Cable screen continuity	
	24 Vdc +ve external supply	
	24 Vdc -ve external supply	
Operating voltage	16 - 22 Vdc from panel	
	24Vdc from external supply	
Application	Indoor installation	
EN60529 rating	IP20	
Temperature range	-10ºC to +75ºC	
Humidity range	0.2 to 0.95 RH (non condensing)	
EMC	CE marked (EEC89/336)	
Material	Moulded ABS	
Dimensions	127mm (Dia) x 5mm (H)	
Colour	Red or White	
Weight	61g	

Description Analogue Sensor Base

Requirement	Description	Offer
Model No		
Specification	EN54 Part 18	
Description	Analogue Sensor Base - surface fixed	
Compatibility	All analogue sensors	
Mounting	Surface	
Terminals	2 core loop or spur	
Monitoring	Loop +ve in/out	
	Loop -ve in/out	
	Cable screen continuity	
	REM LED +ve	
	REM LED -ve	
Operating voltage	16 - 22 Vdc from panel	
	24Vdc from external supply	
Application	Indoor installation	
EN60529 rating	IP42	
Temperature range	-10ºC to +75ºC	
Humidity range	0.2 to 0.95 RH (non condensing)	
EMC	CE marked (EEC89/336)	
Material	Moulded ABS	
Dimensions	108mm (Dia) x 18mm (H)	
Colour	Red or White	
Weight	52g	

Description Addressable Fire Panel

Requirement	Description	Offer
Model No		
Specification	EN54 Part 18	
General Description	Addressable Fire Panel supplied in local language, with userinterface, with 2 loops that supports up to 254 devices each (127 addresses) in 128 zones, have standard 4 supervised sounder/fire-routing outputs, which can be used as freely programmable outputs as well. In addition 2 conventional relay outputs and 2 supervised outputs, working in pair and dedicated to common fire and fault conditions, as well as 2 user configurable inputs for monitoring and control are available.	
Options	The panels supports one auxiliary relay board with 8 outputs - 2 standard fitted with relays and 6 open collector outputs with the option to add relays afterwards - and one network board to create a maximum of 32 nodes / 32 loops network of fire panels, fire panel repeaters and black-boxes (including conventional fire panels and fire panel repeaters up to a maximum of 64 conventional zones). If seperate zone indications are required, a 24 zone fire/fault LED indicator board can be mounted in the panel or repeater with space for a 4 digit number.	
Compatibility	All analogue addressable systems	
Mains supply		
Voltage	230 / 110 VAC (+10% / -15%)	
Frequency	50 / 60 Hz (±5%)	
Current Nom.	0.6 / 1.3 A, Max. 1.5 / 3.15 A	
Fuse rating	2 / 4 A	
Cable type	3 x 1.5 mm² (live, neutral, earth)	
Batteries	2 x 12V/18Ah (use supplied cables)	
Outputs		
Programmable supervised	2, 750mA / 19.5-28VDC (24VDC nominal)	
General Fire + Fault supervised	2, 350mA / 19.5-28VDC (24 VDC nominal)	
General Fire + Fault relay	2	
Aux	1 resettable, 500mA / 19.5-28VDC (24VDC nominal)	
Cable Type	Recommended 2 core 1.5 mm² twisted pair	
End of Line Resistor	15kohm	
Inputs		
Programmable	2	
Cable Type	Recommended 2 core 1.5 mm² twisted pair	
End of Line Resistor	15kohm	
Maximum Load	150 mA	
Loops		
Outputs	2, 300mA@11VDC (peak 500mA@20V)	
Cable Length	max 75ohms / 700nF (max 3.5km with 2mm² and 127 detectors)	
Cable Type	Recommended 2 core 1.5 mm² twisted pair	
Environmental conditions		
Storage temperature	-10°C to +50 °C	
Operating temperature	-8°C to +42 °C	
Relative humidity	max. 95 % (non-condensing)	
Mechanical		
Size (W x D x H)	410 x 162 x 298 mm	
Weight	5.2 kg (without batteries)	
Color	RAL7035	
Cable entries (Top / Bottom / Bac	18 (20mm) / 2 (20mm) / 2 removable plates	
IP rating	max. 95 % (non-condensing)	
Approvals and Compliance	CE / CPD / EN54-2 / EN54-4	
	NEN2535 / NBNS21-100 compliant	
	BS5839-1 compliant	
	VdS and LPCB certified	
	WEEE / RoHS compliant	

Description Addressable Fire Panel Accessory

Requirement	Description	Offer
Model No		
Specification	EN54 Part 18	
General Description	The loop board with plugable connectors adds 2 additional loops to your 2-loop low-end addressable fire panel that doubles the amount of devices to be supported by one panel and 128 extra zones can be programmed. Together with the 2 additional loops, 4 supervised sounder/fire-routing outputs, which can be used as freely programmable outputs, also included	
Mounting	The board can be plugged directly on the front of the main board of the panel on the easy to remove chassis. No additional cabling needed.	
Compatibility	All analogue addressable systems	
Outputs		
Programmable supervised	4, 700mA / 19.5-28VDC (24VDC nominal)	
Cable Type	Recommended 2 core 1.5 mm² twisted pair	
End of Line Resistor	15kohm	
Loops		
Outputs	2, 300mA@11VDC (peak 500mA@20V)	
Cable Length	56ohm / 1microF max. 4 km	
Cable Type	Recommended 2 core 1.5 mm² twisted pair	
Environmental conditions		
Storage temperature	-10°C to +50 °C	
Operating temperature	-8°C to +42 °C	
Relative humidity	max. 95 % (non-condensing)	
Mechanical		
Weight	0.12 kg	

PART C4: SITE INFORMATION

Document reference	Title	No of pages
	This cover page	1
C4	Site Information	
	Total number of pages	1

Core clause 11.2(16) states

“Site Information is information which describes the Site and its surroundings and is in the documents which the Contract Data states it is in.”

Refer to site information in C3.1 Terms of Reference, Section 3 SITE INFORMATION.